RPmag

electromagnetic induction flow measurement

technical documentation EN Rev. A

CONTENTS

1-WARRANTY	pag. 3
2-CALIBRATION CERTIFICATE	pag. 3
3-PRODUCT	pag. 4
4-PERFORMANCE SPECIFICATIONS	pag. 5
5-FLOW RANGE	pag. 6
6-DIMENSION	pag. 8
7-INSTALLATION	pag. 13
8-ELECTRICAL CONNECTIONS	pag. 21
9-LOCAL OPERATOR INTERFACE (LOI)	pag. 29
10-PROGRAMMING	pag. 32
11-TROUBLESHOOTING	pag. 50
12-FACTORY TEST AND QUALITY CERTIFICATE	pag. 52

1-WARRANTY

Products supplied by SGM LEKTRA are guaranteed for a period of 12 (twelve) months from delivery date according to the conditions specified in our sale conditions document.
SGM LEKTRA can choose to repair or replace the Product.
If the Product is repaired it will maintain the original term of guarantee, whereas if the Product is replaced it will have 12 (twelve) months of guarantee.
The warranty will be null if the Client modifies, repair or uses the Products for other purposes than the normal conditions foreseen by instructions or Contract.
In no circumstances shall SGM LEKTRA be liable for direct, indirect or consequential or other loss or damage whether caused by negligence on the part of the company or its employees or otherwise howsoever arising out of defective goods

2-CALIBRATION CERTIFICATE

All the electromagnetic flowmeter are tested by 3 point rigs calibration.
The producer releases a document on letterhead certifying the average error of the 3-point calibration.
The calibration certificate is supplied with the unit.
The company archives the test data of each electromagnetic flowmeter.
The calibration rig is certificated by N.I.M. (National Institute of Metrology), which is internationally recognizedby B.I.P.M. (Bureau International des Poids et Metrologie) and complies with NTC ISO IEC 17025 standard.
All calibrations are made in accordance to EN 45001 standards and with an accuracy better than 99.97%

3- PRODUCT

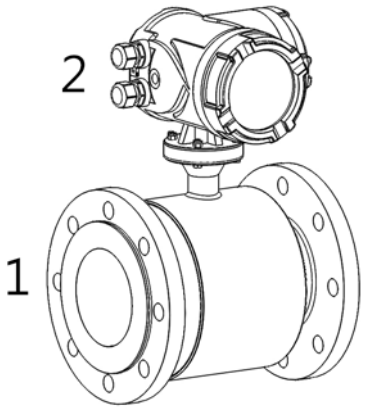

COMPACT VERSION

1. Sensor
2. Converter

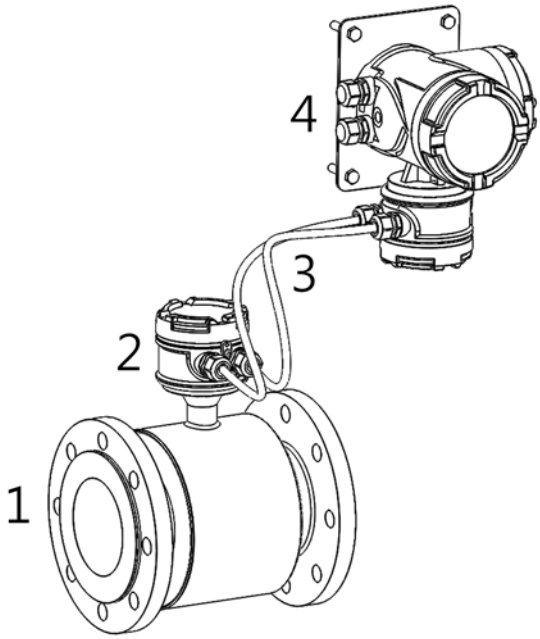

REMOTE VERSION

1. Sensor
2. Connection housing
3. Connection cables
4. Converter, wall mouting

2.1 IDENTIFICATION

Each meter has an adhesive identification plate on which are the meter main data. The following picture describes the information and data on the identification plate.

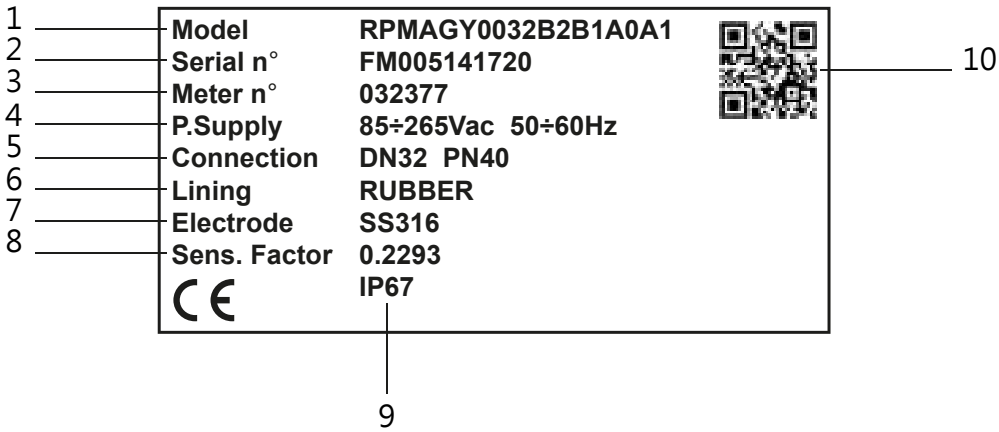

1. Product code
2. Serial number
3. Production batch
4. Power supply
5. Process connection
6. Lining material
7. Electrodes material
8. Sensor factor
9. Protection

4-FEATURES

Flow rate range
RPmag is able to process signals from fluids with flow rates of up to 10m / s in both directions (bidirectional meter).

Range dimension / lining material
PTFE DN10 ÷ DN500
RUBBER DN65 ÷ DN2000

Sensor material
SS321

Housing material
aluminium

Electrodes material
SS316L - Hastelloy C - Titanium - Tantalum - Platinum

Measure range
<0,1m3/h ÷ >110000m3/h

Accuracy
±0,5% standard; ±0,2% optional

Repeatability
±0,1%

Fluid conductivity
>5µS/cm.

Power supply
85÷265Vac, 24Vdc, 12Vdc.

Consumption
6W, max. 8W.

Ambient Temperature Limits
Remote version operating temperature:
RUBBER -10 ÷ +80°C; PTFE -40 ÷ +150°C
Compact version operating temperature:
RUBBER -10 ÷ +80°C; PTFE -40 ÷ +100°C
Storage temperature: -40÷85°C

Communication protocol
modbus or Hart (opt.)

Output
4÷20mA: 0÷750 ohm load.
Frequency output: 0,1÷5000 Hz
Pulse output: 24Vdc pull up open collector or galvanically isolated open collector (opt.)
Alarm output: 2 relays, 3A 230Vac N.O. (not available for 12Vdc power supply version)

Reverse Flow
Allow measure reverse flow.

Output Testing
Current Source: Transmitter can be commanded to supply a specified test current between 4.0 and 20.0 mA.
Frequency Source: Transmitter can be commanded to supply a specified test frequency between 0.1 and 5000 Hz

Start-up Time
0.5 seconds.

Low Flow Cutoff
Adjustable between 0.0 and 9.9%Qmax. Below selected value, output is driven to the zero flow rate signal level.

Humidity Limits
0-100% RH to 150 °F (65 °C), not condensing.

Damping
Adjustable between 0.1 and 99 seconds.

Compact version IP rating
IP67

Remote version IP rating
sensor IP67 / IP68 (by request) - converter IP67

Anti-condensation flter
Anti-condensation fi lter installed on converter

5-FLOW RANGE

5.1 FLOW RANGE GRAPHIC

Flow range from DN3 to DN500 (starting from DN10)

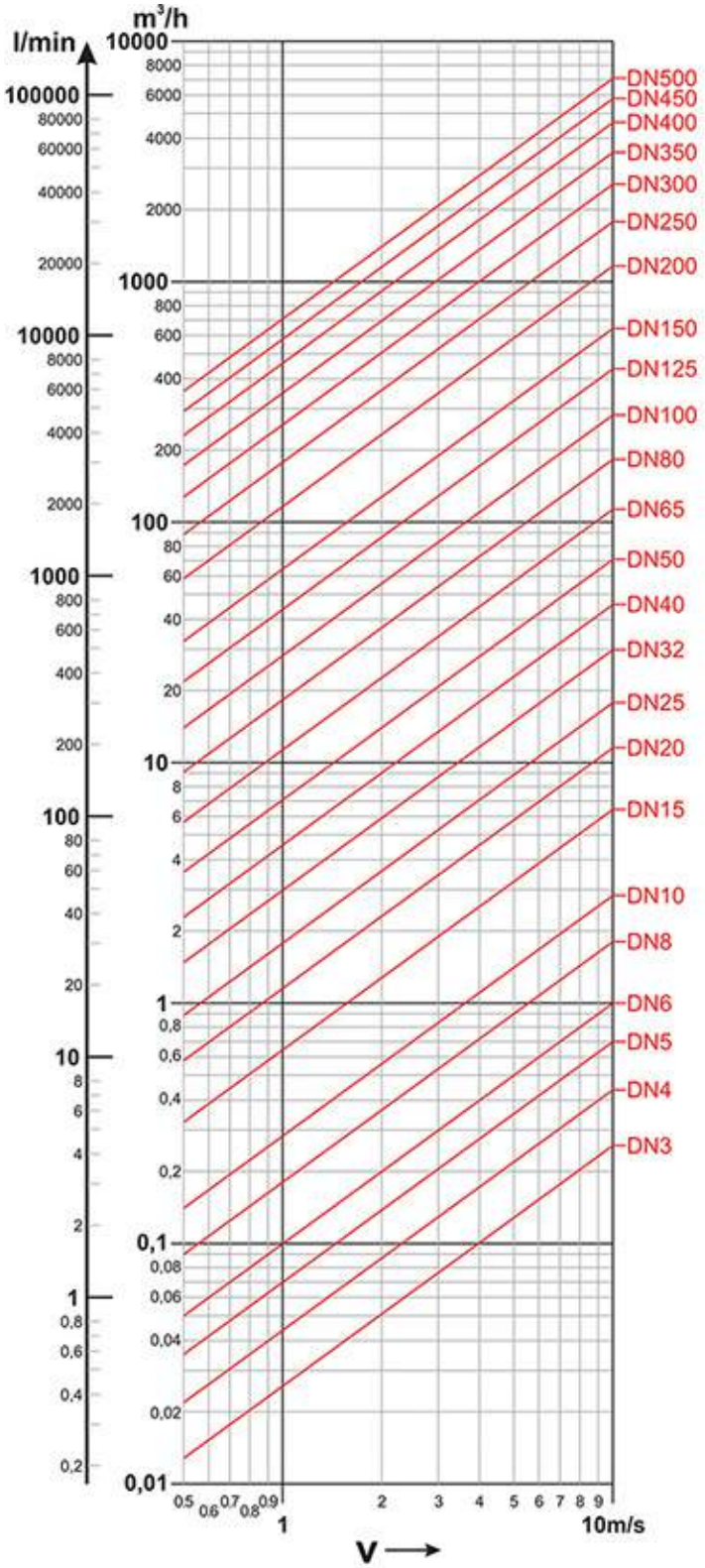

Flow range from DN600 to DN2000

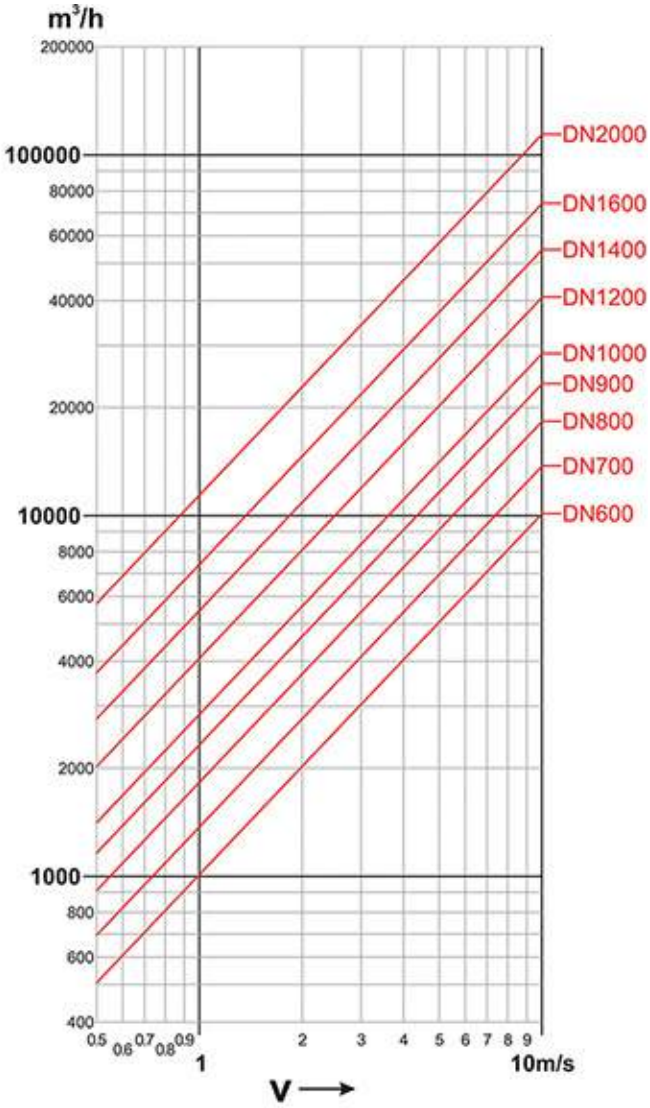

5.2 FLOW RANGE TABLES

DN10 ÷ 300	
DN (mm)	**Range: Minimum (0,5 m/s) / Maximum (10 m/s)**
10	0.14 ÷ 2.9 m3/h
15	0.3 ÷ 6 m3/h
20	0.5 ÷ 12 m3/h
25	0.6 ÷ 18 m3/h
32	1 ÷ 30 m3/h
40	1.8 ÷ 42 m3/h
50	3 ÷ 66 m3/h
65	5.8 ÷ 120 m3/h
80	8.9 ÷ 180 m3/h
100	11 ÷ 282 m3/h
125	20 ÷ 450 m3/h
150	30 ÷ 600 m3/h
200	50 ÷ 1100 m3/h
250	85 ÷ 1700 m3/h
300	110 ÷ 2400 m3/h

DN350 ÷ 2000	
DN (mm)	**Range: Minimum (0,5 m/s) / Maximum (10 m/s)**
350	180 ÷ 3300 m3/h
400	220 ÷ 4200 m3/h
450	270 ÷ 5400 m3/h
500	320 ÷ 6600 m3/h
600	490 ÷ 9600 m3/h
700	680 ÷ 13500 m3/h
800	900 ÷ 18000 m3/h
900	1200 ÷ 22500 m3/h
1000	1450 ÷ 28000 m3/h
1200	2500 ÷ 40000 m3/h
1400	3000 ÷ 55000 m3/h
1600	4000 ÷ 70000 m3/h
1800	5000 ÷ 90000 m3/h
2000	6000 ÷ 110000 m3/h

5.3 LOAD LOSS

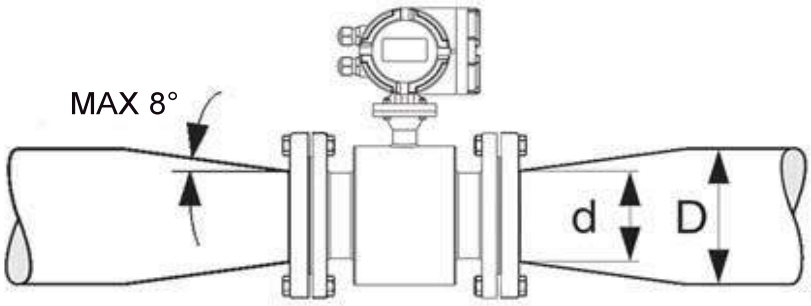

Adaptation cones

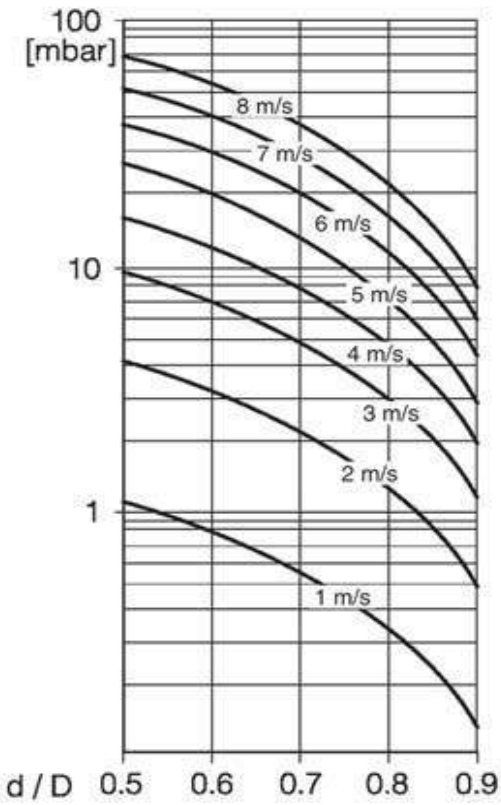

6-DIMENSIONS

6.1 REMOTE VERSION CONVERTER

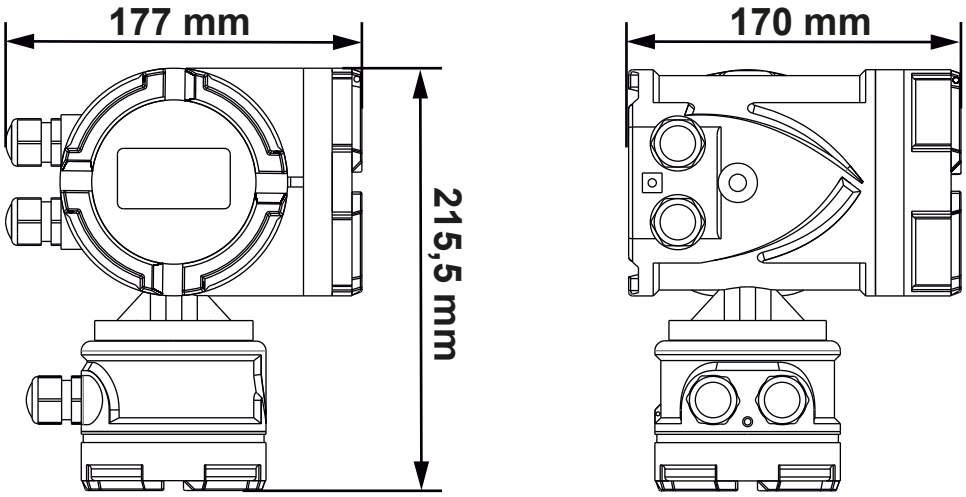

6.2 WALL MOUNTING REMOTE VERSION CONVERTER

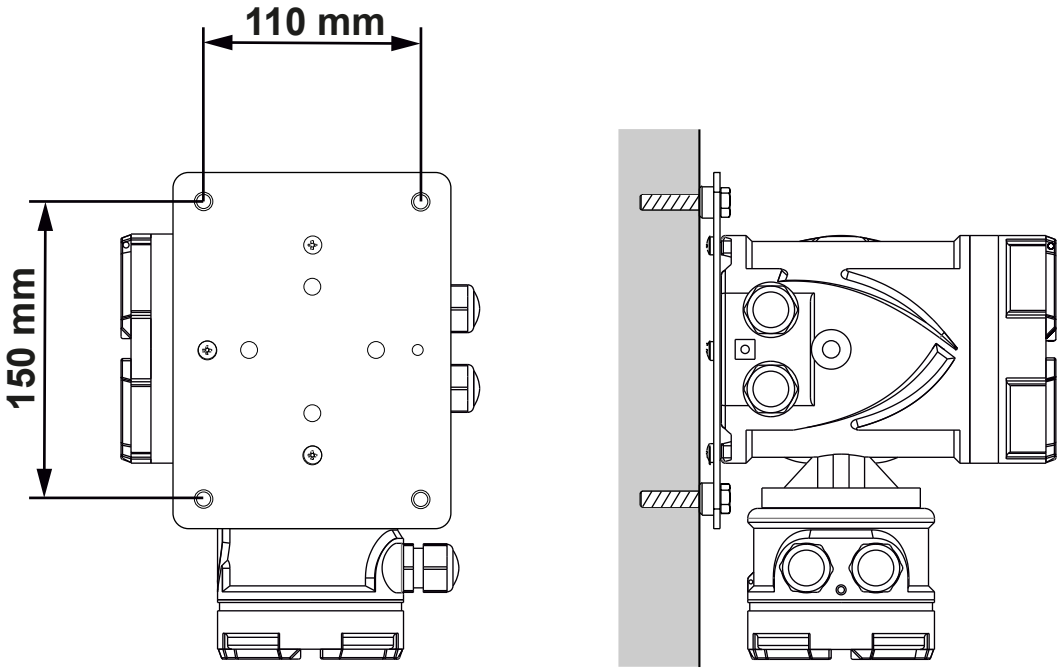

6.3 COMPACT VERSION DN10 ÷ DN80 PN16 - PN40

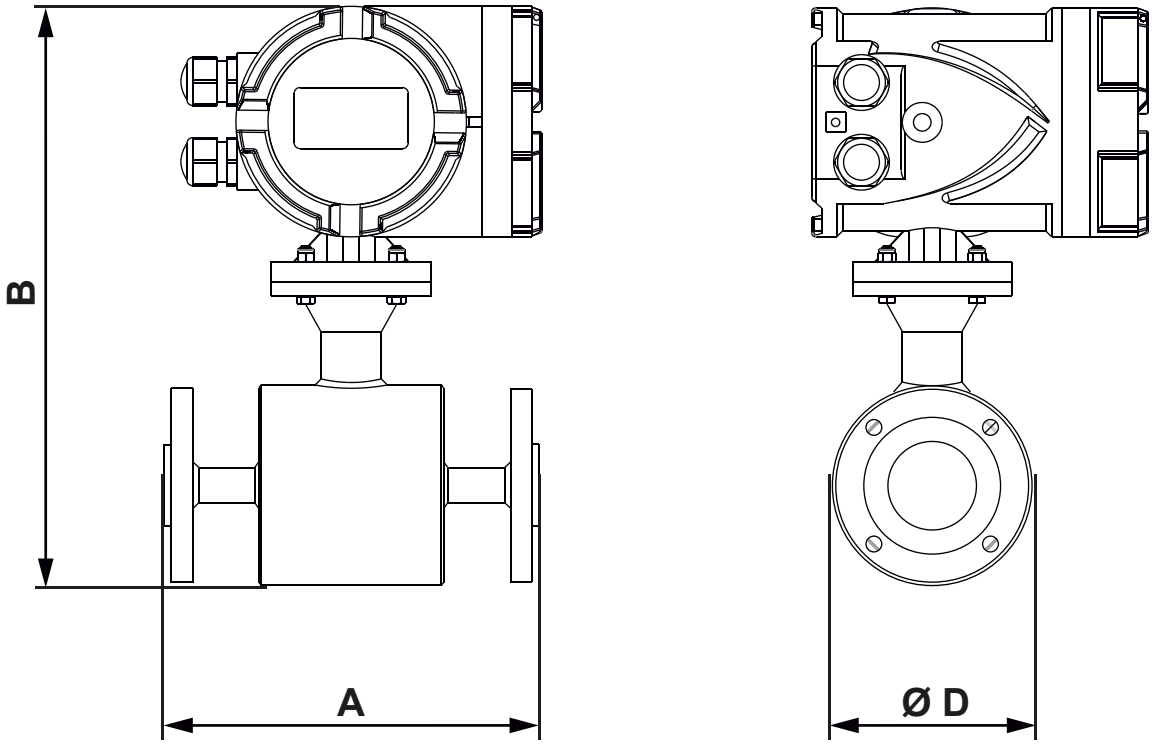

DN (mm)	A (mm)	PN 16 - PN 40	
		B (mm)	ØD (mm)
10	200	295	90
15		295	95
20		300	105
25		300	115
32		315	140
40		335	150
50		344	165
65		360	185
80		375	200

6.3 COMPACT VERSION DN100 ÷ DN1000 PN10 - PN16 - PN40

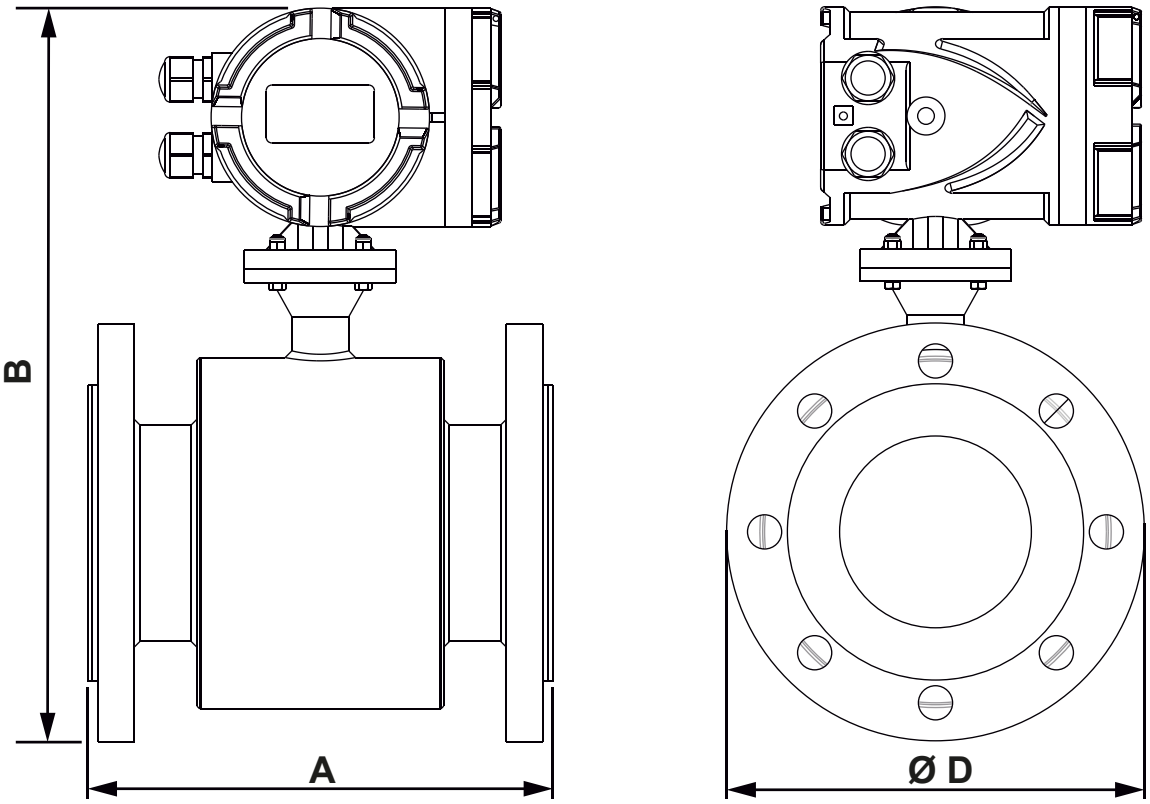

DN (mm)	A (mm)	PN 10		PN 16		PN 40	
		B (mm)	ØD (mm)	B (mm)	ØD (mm)	B (mm)	ØD (mm)
100	250	-	-	400	220	410	235
125	250	-	-	420	250	435	270
150	300	-	-	460	285	468	300
200	350	520	340	520	340	538	375
250	450	570	395	575	405	598	450
300	500	620	445	620	460	648	515
350	550	670	505	678	520	708	580
400	600	730	565	738	580	778	660
450	600	780	615	793	640	816	685
500	600	830	670	850	715	870	755
600	600	930	780	960	840	985	890
700	700	1050	895	1080	910	-	-
800	800	1165	1015	1170	1025	-	-
900	900	1270	1115	1275	1125	-	-
1000	1000	1360	1230	1375	1255	-	-

6.4 REMOTE VERSION DN10 ÷ DN25 PN16 - PN40

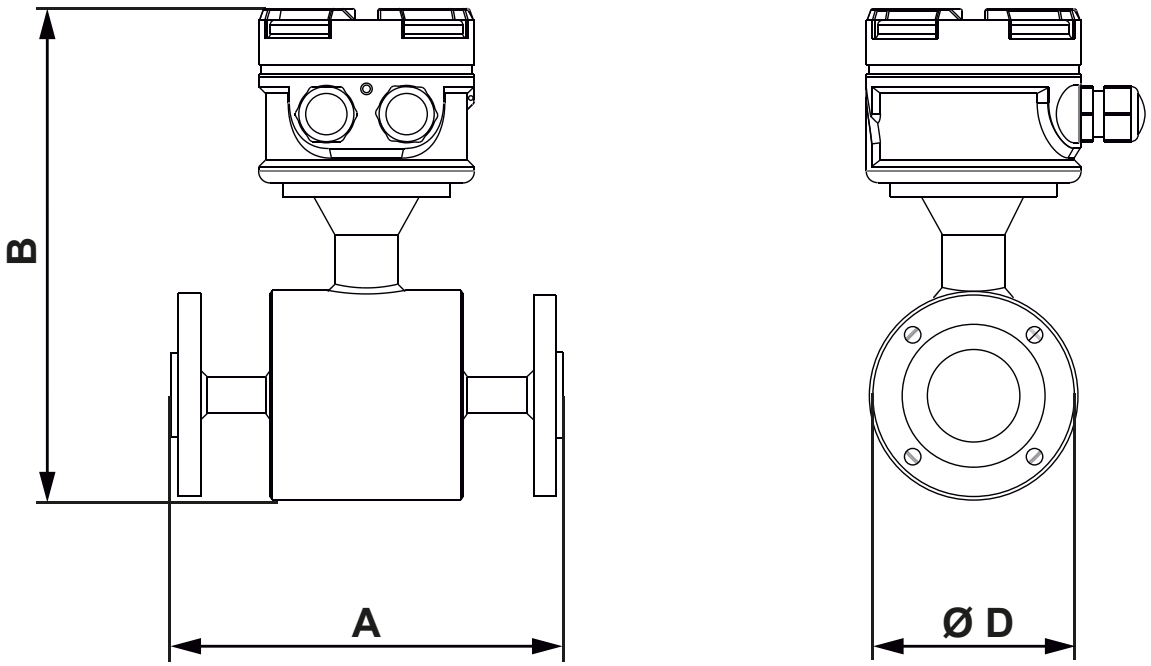

DN (mm)	A (mm)	PN 16 - PN 40	
		B (mm)	ØD (mm)
10	200	235	90
15		235	95
20		240	105
25		240	115

6.5 REMOTE VERSION DN32 ÷ DN1000 PN10 - PN16 - PN40

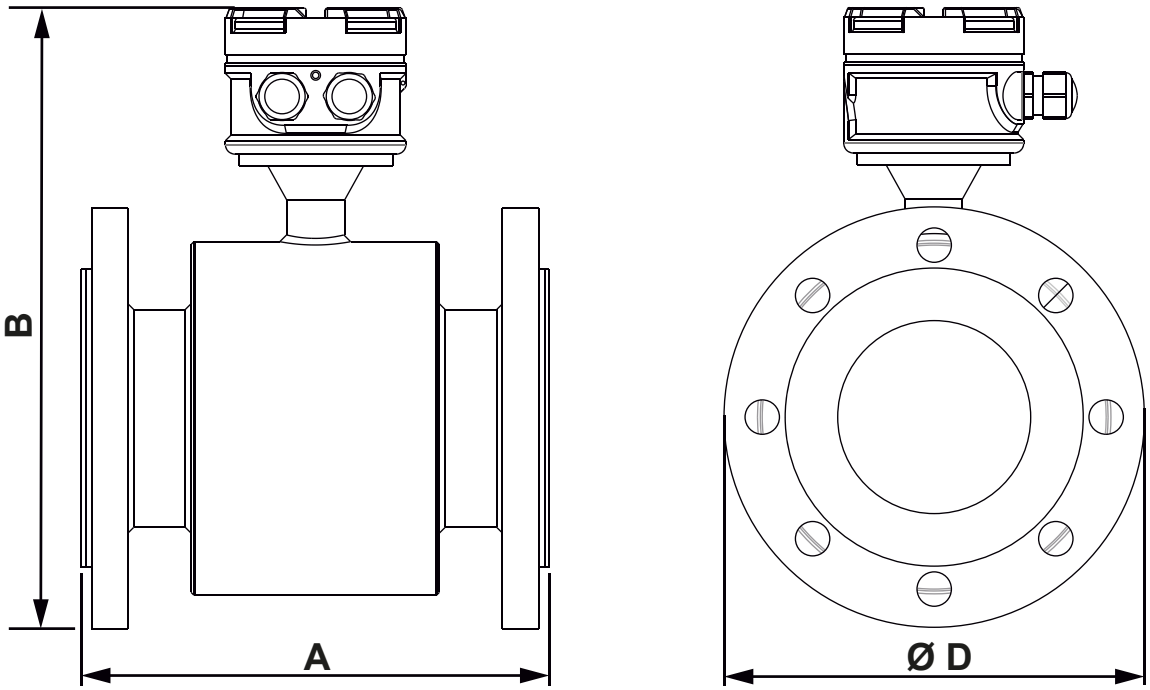

DN (mm)	A (mm)	PN 10		PN 16		PN 40	
		B (mm)	ØD (mm)	B (mm)	ØD (mm)	B (mm)	ØD (mm)
32	200	-	-	251	140	254	140
40	200	-	-	270	150	270	150
50	200	-	-	280	165	280	165
65	200	-	-	298	185	298	185
80	200	-	-	315	200	315	200
100	250	-	-	333	220	343	235
125	250	-	-	358	250	368	270
150	300	-	-	393	285	400	300
200	350	450	340	450	340	468	375
250	450	505	395	510	405	533	450
300	500	550	445	558	460	586	515
350	550	605	505	613	520	643	580
400	600	665	565	673	580	713	660
450	600	715	615	728	640	751	685
500	600	765	670	785	715	805	755
600	600	870	780	900	840	810	890
700	700	987	895	995	910	-	-
800	800	1100	1015	1105	1025	-	-
900	900	1202	1115	1207	1125	-	-
1000	1000	1293	1230	1306	1255	-	-

7-INSTALLATION

7.1 SAFETY MEASURE

Instructions and procedures in this section may require special precautions to ensure the safety of the personnel per forming the operations. Information that raises potential safety issues is indicated by a warning symbol . Please refer to the following safety messages before performing an operation preceded by this symbol. ⚠

7.2 WARNINGS

7.2.1 Explosions could result in death or serious injury

- Verify that the operating atmosphere of the sensor pipe and transmitter is consisten with the appropriate hazardous locations certifications.
- Do not remove the transmitter cover in explosive atmospheres when the circuit is alive.

7.2.2 Failure to follow safe installation and servicing guidelines could result in death or serious injury

- Make sure only qualified personnel perform the installation.
- Do not perform any service other than those contained in this manual unless qualified.

7.2.3 High voltage that may be present on leads could cause electrical shock

- Avoid contact with leads and terminals.

7.3 PRE-INSTALLATION

There are several pre-installation steps that make the installation process easier. They include identifying the options and configurations that apply to your application, setting the hardware switches if necessary, and consideration of mechanical, electrical, and environmental requirements. Please remember that the sensor pipe liner is vulnerable to handling damage. Never place anything through the sensor pipe for the purpose of lifting or gaining leverage. Damaged liner can render the sensor pipe useless.

7.3.1 Identify Options and Configurations

Standard application of the RPmag includes control of the sensor pipe coils and one or more of the following con figurations or options:

- 4÷20mA output
- Pulse output
- Alarm output

Be sure to identify the options and configurations that apply to your situation, and keep a list of them nearby during the installation and configuration procedures.

7.3.2 Mechanical Considerations

The mounting site for the RPmag Integral Mount Transmitter should provide enough room for secure mounting, easy access to the conduit ports, full opening of the transmitter covers, and easy readability of the local operator interface (LOI) screen.The LOI can be rotated in 90° increments.

7.3.3 Lift

The flowmeter can be lifted using the lift as shown in following pictures. The safe load and measure for the lift should reach to the relative requirement. Don’t lift the flowmeter using the rope to tie the connection between the sensor and the transmitter (compact version) or the connecting box (remote version)

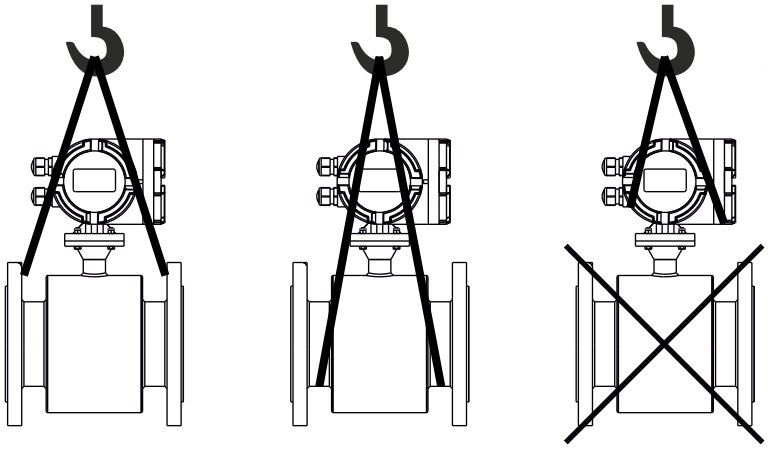

7.4 INSTALLATION GENERAL CRITERIA

The flowmeter can test automatically flow direction. Because the direction arrow marked on the nameplate is flow direction when calibrated in factory, you should install the flowmeter to make the actual flow direction same as the flow direction arrow marked on the nameplate. If this is not possible, simply reverse the direct flow direction through the "Indication" (see par. 10.4.4.2.6)
The upstream straight pipe should be longer than 5 × DN to guarantee the accuracy of measurement. When the distance is more than 5×DN between the device (e.g. cone pipe, orifice plate, valve) and the sensor of flowmeter, their affection is negligible. And the downstream straight pipe should be more than 3×DN

7.5 INSTALLATION IN PIPELINE

In principle, the measurement of the electromagnetic flowmeter is independence of the distribution of velocity as long as the distribution of velocity in measuring tube is symmetrical. Installation may be horizontal or vertical, but make sure no deposit on the electrodes when horizontal installation. See **Fig.13-A**.

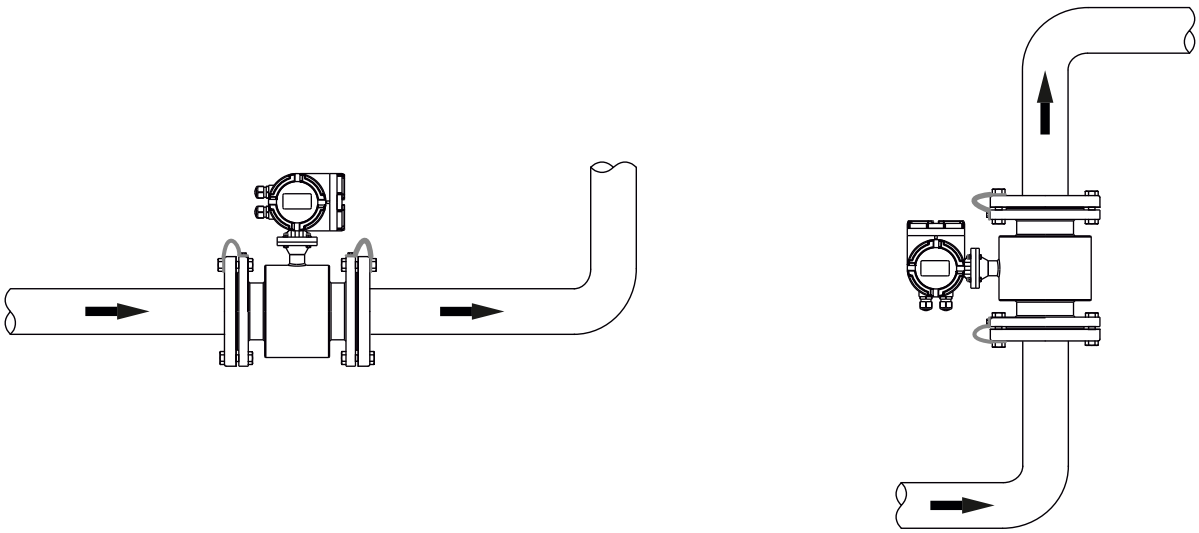

Fig.13-A. Installation in horizontal or vertical pipeline

To install an rectifier or straight pipe is necessary to normalize the flow profile if there are pipe elbow, flow regulation valve or half-open ball valve in front of the sensor. See **fig.13-B**.

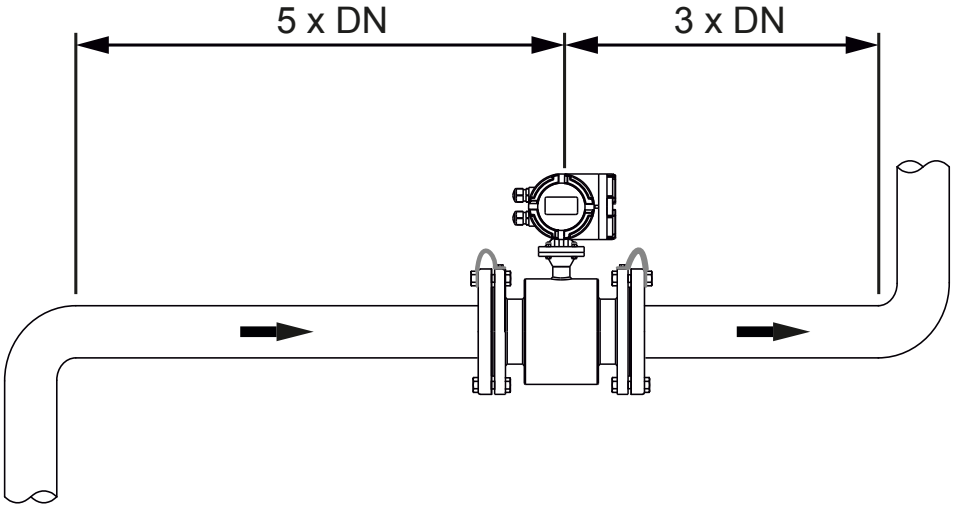

Fig.13-B. Requirement to install the flowmeter straight pipes

The electromagnetic flowmeter must be installed so that the pipe is always completely filled with fluid. In partially filled pipe case, the flowmeter must be installed with the siphon phenomenon, for which the pipe stretch where the meter is installed is kept always full. See **Fig.14-A**.

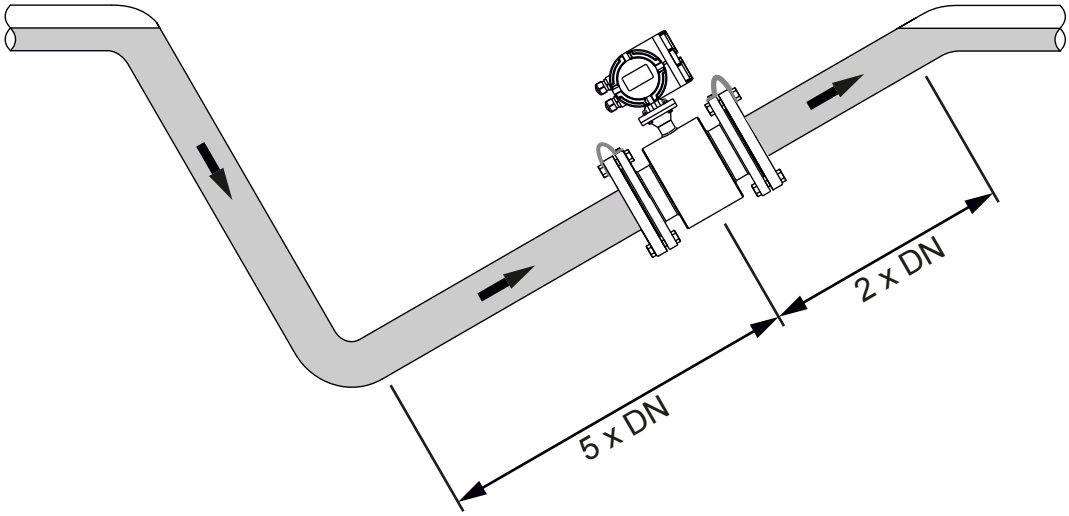

Fig.14-A Installation in partially filled pipes

The electromagnetic flowmeter must not be installed in the pipe section with a free pipe outlet that could run empty. When installating in a downstream pipe, please make sure the pipe is always fully filled with medium
See **Fig.14-B**

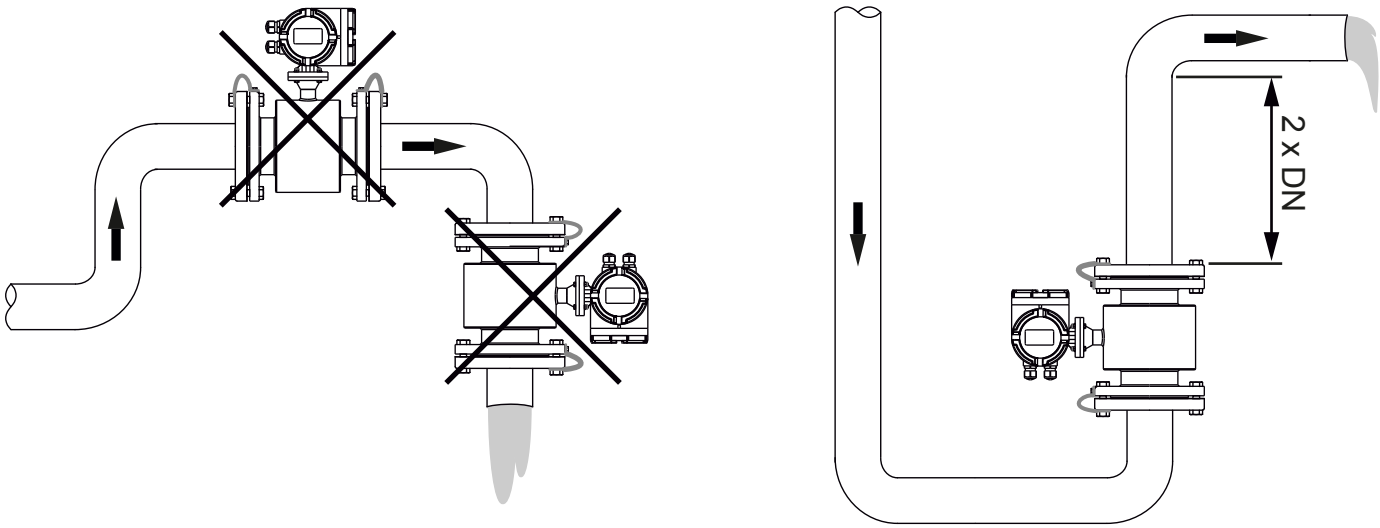

Fig.14-B Installation in pipe without emptying

The electromagnetic flowmeter can not be installed at the pipe highest point, because air or gas accumulations may occur in the measuring pipe. See **Fig.15-A**

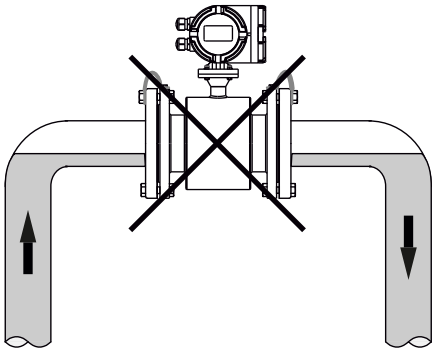

Fig.15-A Installation at highest point

The electromagnetic flowmeter can not be installed upstream of a pump to prevent cavitation, which can damage the sensor lining. See **Fig.15-B**

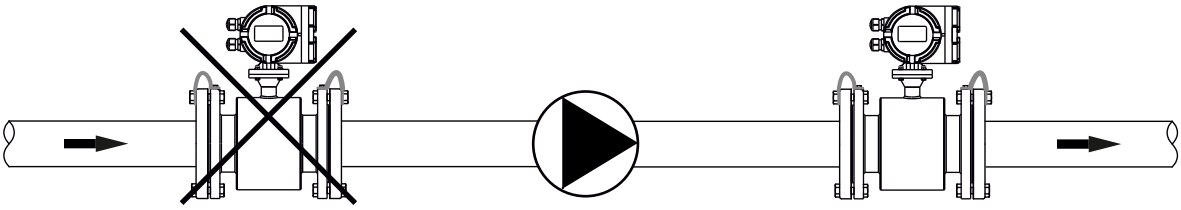

Fig.15-B Near pumps installation

Install a siphon (**a**) with a vent valve (**b**) downstream of the sensor in down pipes longer than 5 meters. This precaution is to avoid low pressure and the consequent risk of damage to the lining of the measuring tube. See **Fig.15-C**

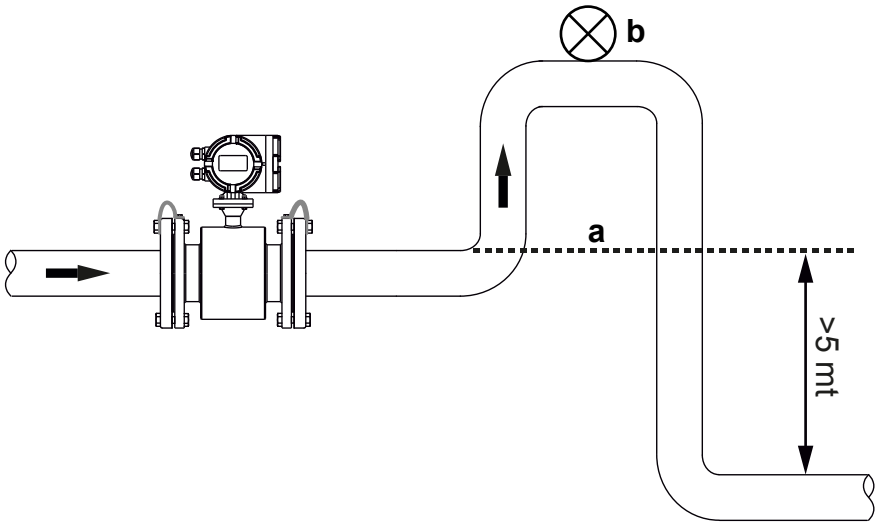

Fig.15-C Installation in proximity of a > 5m down pipe section

7.6 INSTALLATION PRECAUTIONS

An all-weather cover should be used to prevent the housing from the direct sunlight or rain when the device in outdoors The flowmeter should the excessive vibrations, large ambient temperature changing and long-time shower. It should be prevent from the leakage of the corrosive liquid.

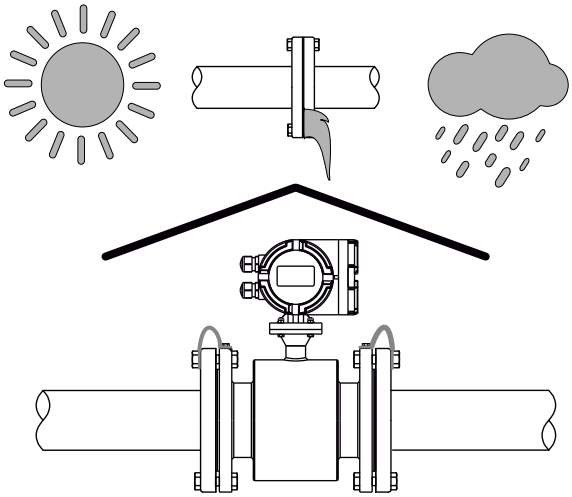

7.7 PIPE CONNECTION

The sensor itself can not be as its support, it should be supported to the connecting pipes. And the sensor should not withstand too big fastening stress. It should be taken to account to eliminate the affection of the stress caused by thermal expansion.

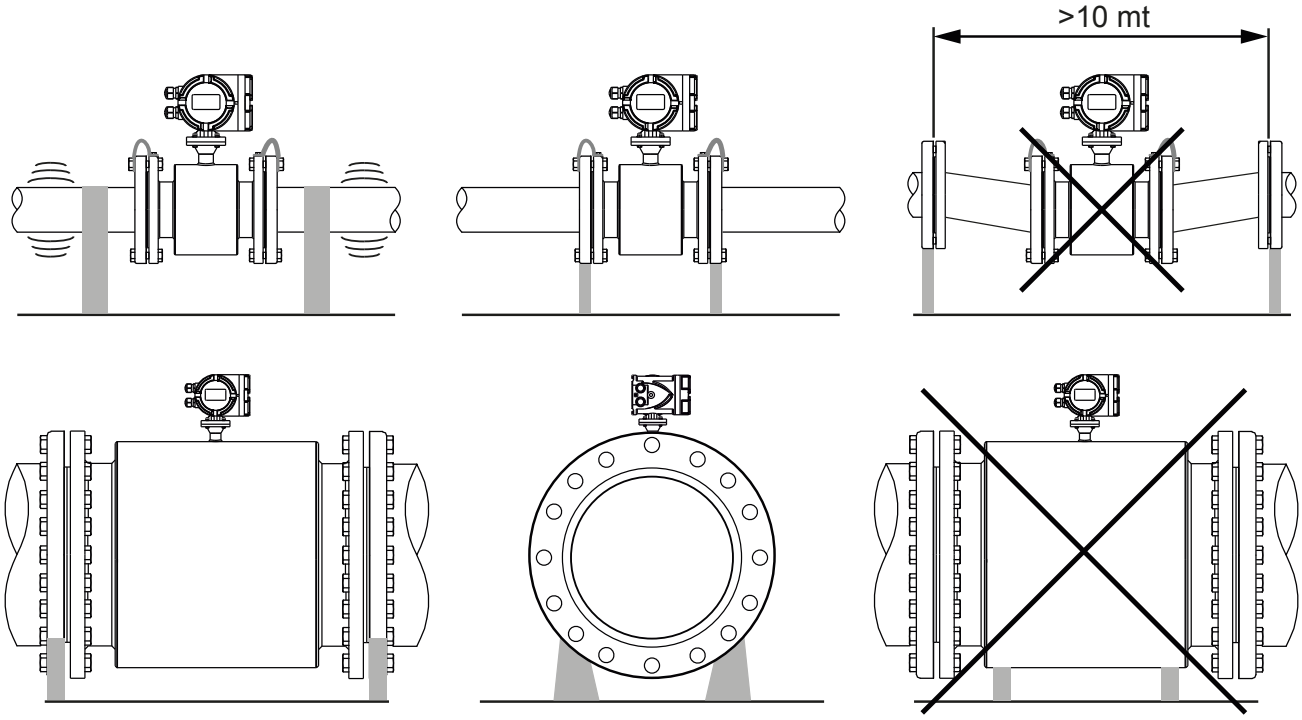

7.8 MOUNTING REQUIREMENTS

a) The sensor pipe and the line pipes must have the same axis. For the sensors under DN50, the axial difference between the measuring tube and operating pipe should be less than 1.5mm; for the sensors from DN65 to DN300, it should be less than 2mm; for the sensor over DN350, it should be less than 4mm.

b) The gasket between flanges should have a good corrosive resistance. The gasket must not extend to the pipe inside.

c) The threads of the fasten bolts and nuts should be in good condition. The bolts should be fastened using torque spanner with certain torque according the size of flange.

d) It should take separate measure to prevent the lining from heat when weld or flame cutting in the pipe closed to sensor. If the sensor is installed in a well or immersed in water, the connecting box for sensor must be filled and sealed with sealing glue after commissioning.

7.9 ACCESSORIES

5.9.1 Grounding ring (fig. 13)

Material: SS 316L or Hastelloy C

Thickness: 3mm for SS 316L or 1mm for Hastelloy C

For the non-conductive pipe, the grounding rings should be installed between the flanges of sensor and pipe to make the flowmeter and measured medium same potential.

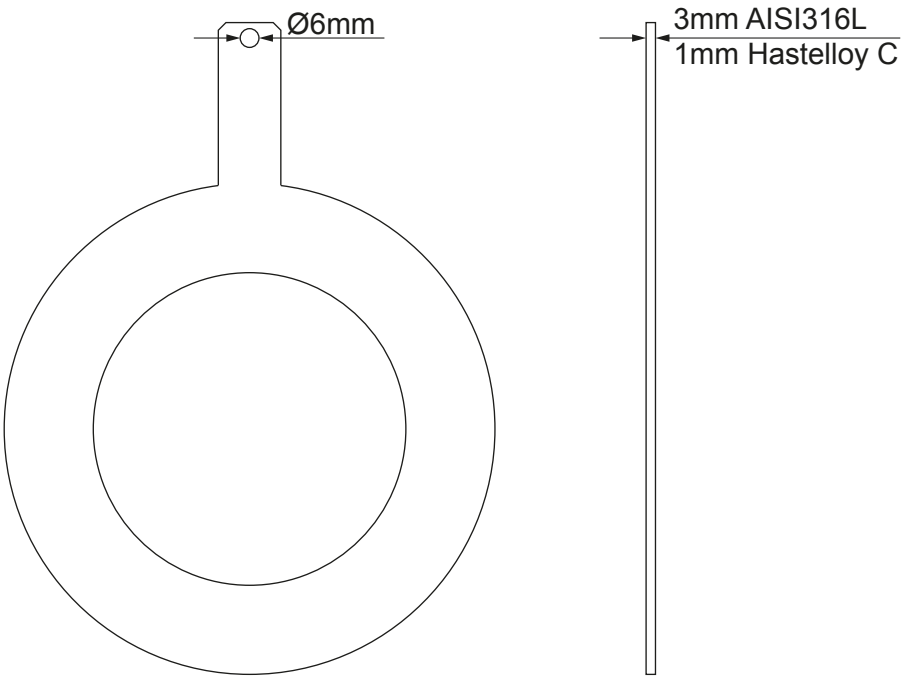

Grounding ring

7.10 EQUIPOTENTIALITY AND ELECTRICAL INTERFERENCE REDUCTION

The measuring circuit considers the measured fluid as zero potential. The measured fluid is grounding potential in most of application, therefore grounding connection actually means connecting to measured fluid. The grounding cable for sensor is connected to metal pipe welding with flanges. The metal tube isolates from the measuring fluid because of lining, so the flanges of sensor should be connected to the flanges contacting directly measuring fluid using wires. The resistance for grounding connection should be less than 10ohm. In most of application, it is unnecessary to take special measure for installing sensor, only require the signal cable separate from the main cable. If the sensor with cathode protection or the process with electroanalysis the main current must not go through the measuring fluid in the sensor.

The following measure should be taken in order to reduce the affection of magnetic flied:

a) In metal piping, the device is made potential equalization via the connection between the sensor and the adjoining pipe. The bolt connection for flanges can not be used instead of the electric connection, it must have an additional electric connection as shown in **Fig.18A**.

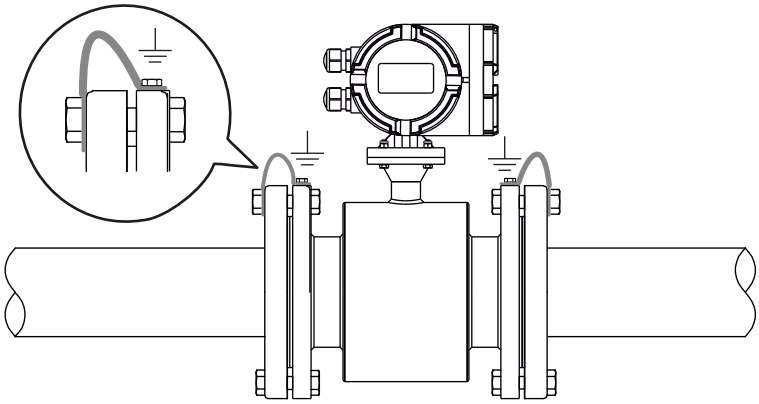

Fig.18A Sensor equipotentiality

b) For the non-inductive pipe, the grounding rings should be installed between the both flanges for sensor and the both flanges for pipe. See **Fig.18B**.

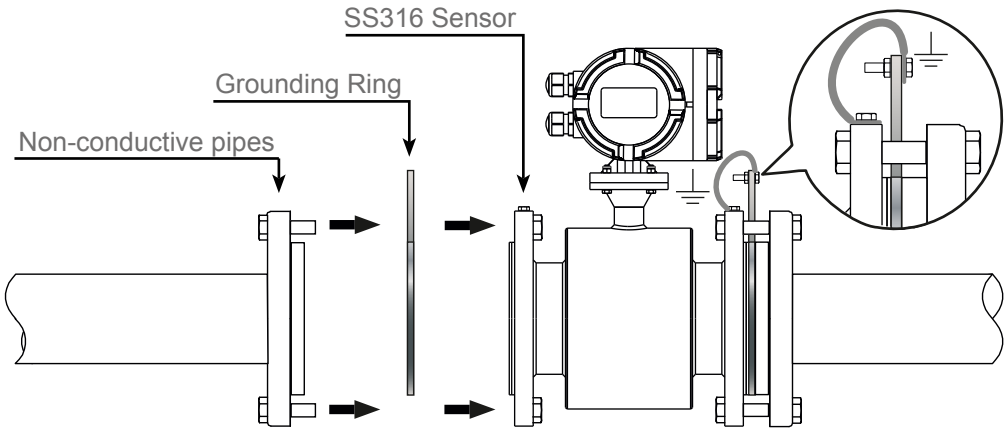

Fig.18B Grounding with non-conductive pipes

c) Some systems, such as pipes with cathodic protection, may be affected by potential disturbance because not all the line is at ground potential. In order to eliminate this type of interference, it must be isolate the line with two rubber pipes as shown in **Fig.19A**.

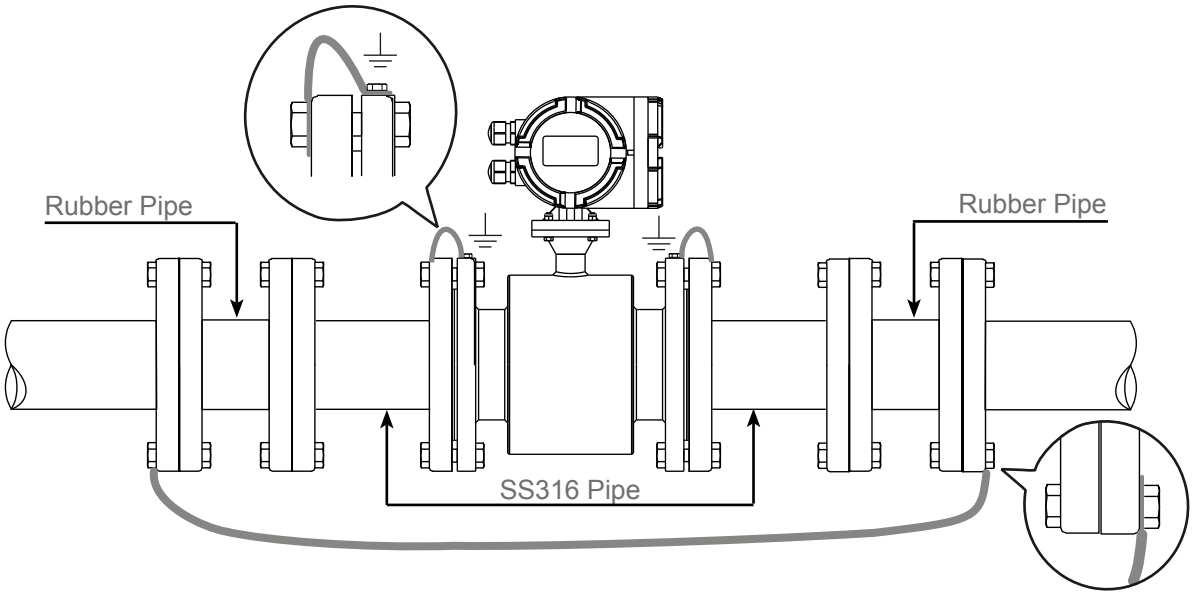

Fig.19A Pipe segmentation

7.11 PREPARATION FOR OPERATION

Strictly check the instalment and wirings before it gets into operation!

It shall be pointed out that the instrument, including the sensor and converter has been fully adjusted, calibrated with actual flow, and inspected under strict measures. All shipped units are certified. No further adjustments are required when put it into operation. Observing the contents in this manual, to check and analyze any malfunction

The following steps are to be followed to get the instrument into operation.

1) Make sure that the sensor is completely filled with fluid.
2) Turn on the power supply. One minute late, the value displayed in the indicator will reach some amount, which means the connections of wires are correct. If the flow direction is wrong, then change the flow direction on the converter.
3) Zero verification. Shut off the valve tight in downstream first and then the valve in upstream, to let the medium in the pipeline stops. The displayed value should be 0. The value displayed can be corrected at the converter if the value is different than 0: ensure that no leaks.

7.12 MAINTENANCE

In general, they are not necessary maintenance and supply of the magnetic flowmeter. Only in the case in which the product can adhere to the inner wall of the sensor, and its electrodes, it is necessary to perform periodic cleaning operations.

Be careful not to damage the lining and the electrodes.

8-ELECTRICAL CONNECTIONS

8.1 CABLE ENTRY

The compact version converter enclosure has n. 2 M20x1.5 cable glands.
The converter enclosure remote version has n.2 M20x1.5 cable glands for power supply and outputs signal, and 2 M16x1.5 cable glands for sensor pipe connection

8.2 ELECTRICAL CONNECTION REQUIREMENTS

Before making the electrical connections, consider the following standards and be sure to have the correct power supply, ducts and other accessories.

8.2.1 Power supply voltage

RPmag transmitter is designed to be powered with 85 ÷ 265Vac (50 to 60 Hz), 24Vdc, 12Vdc voltage.

8.2.2 Power supply voltage interruption

Power supply wires must be connected to the device via a circuit breaker or an external disconnecting switch. The switch or circuit breaker should be clearly labeled and located close to the transmitter

8.2.3 Infiltration and humidity prevention

To avoid the humidity infiltration inside the converter and sensor pipe is recommended:
- fully well tighten the cap and the cable glands
- position the cable so that it forms a downward curve at the M20x1.5 and/or M16x1.5 output (see below figure); in this way the condensation and/or rain water will tend to drip from the curve bottom

.

8.3 POWER CONNECTION

To connect the power supply to the meter, complete the following steps:
1) Open the box connections cover.
2) Insert the power supply cable through the cable gland.
3) Follow the sequent list to connect the power supply cable:

AC Units:
- Connect the GND grounding terminal ⏚
- Connect the wire to terminal **N**.
- Connect the phase to terminal **L**.

D**C Units**:
- Connect the GND grounding terminal ⏚
- Connect + 24Vdc or 12Vdc to terminal **L (+)**.
- Connect 0V to terminal **N (-)**.

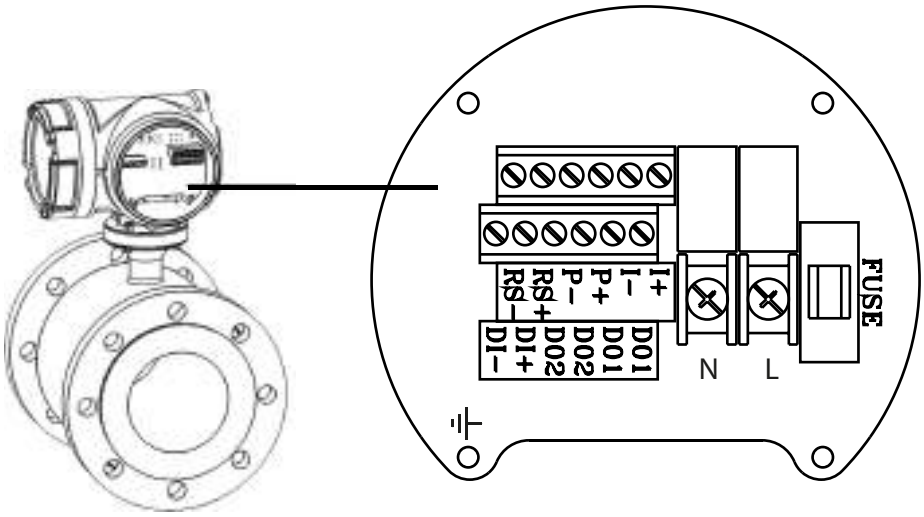

8.4 OUTPUT

To connect the analog and/or impulsive output follow the instructions of the following points

8.4.1 Analog output

The current output is powered from the transmitter. The circuit resistance must be equal to or less than 750ohm.
Follow the below steps to connect the signal cable to the transmitter:
1) Insert the signal cable through the cable gland.
2) Connect the two wires to **I+** and **I-** terminals

The below drawing shows the connection diagram between the RPMAG flowmeter and SLM2XH3 flow totalizer unit.

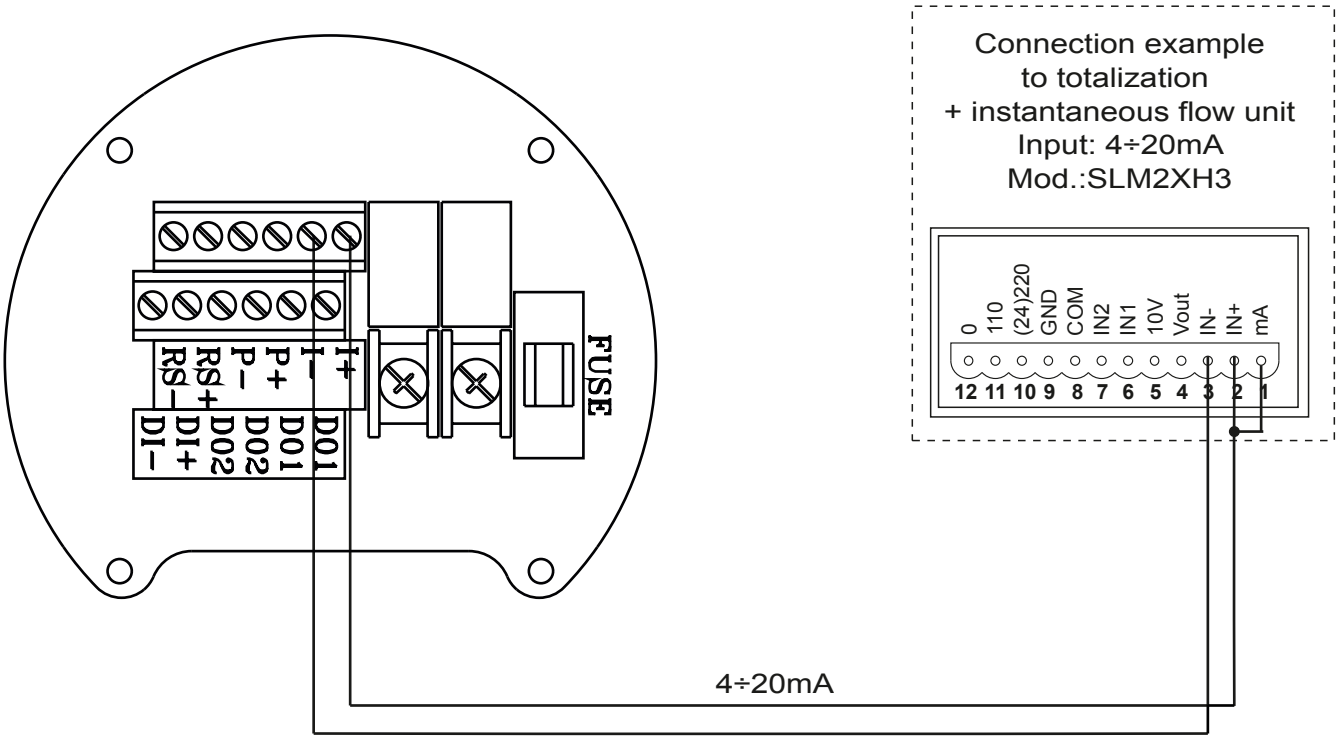

8.4.2 Digital output

When digital output is set in frequency mode, it generates an 0.1÷5000Hz output signal proportional to the measured flow rate; however if it's set in pulsed mode generates an output signal in relation to the totalized volume increase. The signal is normally used in combination with an external totalizer, a pulse counter or an acquisition system. The resistance in the circuit must be equal to or greater than 100Kohms.
Follow the below steps to connect the signal cable to the transmitter:
1) Insert signal cable through the cable gland.
2) Connect two wires to **P+** and **P-** terminals

N.B. - When the RPmag pulse output is connected to an acquisition system that requires a current higher than 2,3mA, a properly sized pull-up resistor must be connected to ensure the minimum current required by the acquisition system connected (see drawing below); example: if the acquisition system requires a min. current of 10mA, a 2,4Kohm pull-up resistor must be connected (according to the calculation R = V / I = 24V / 10mA = 2,4Kohm) between an external power supply of 24 Vdc and the acquisition system input terminal

The below drawing shows the connection diagram between the RPMAG flowmeter and the 199-B1X counter unit

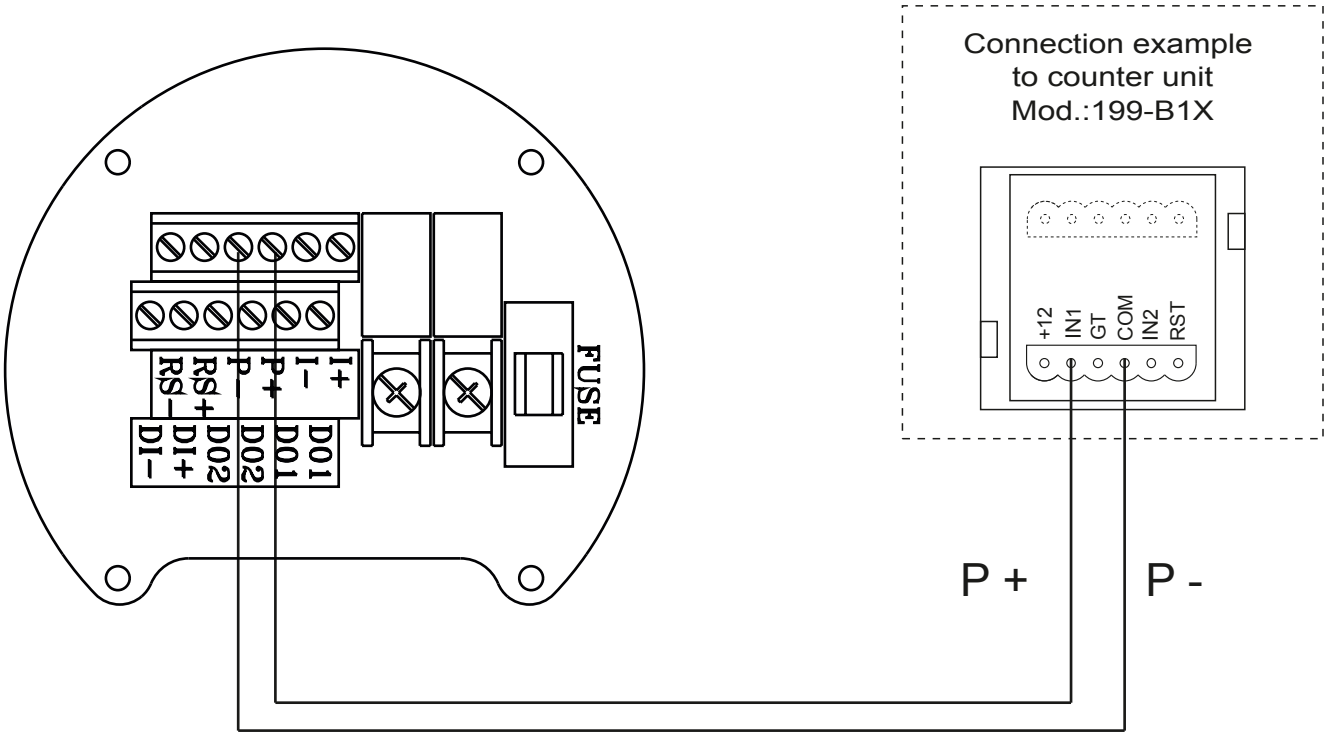

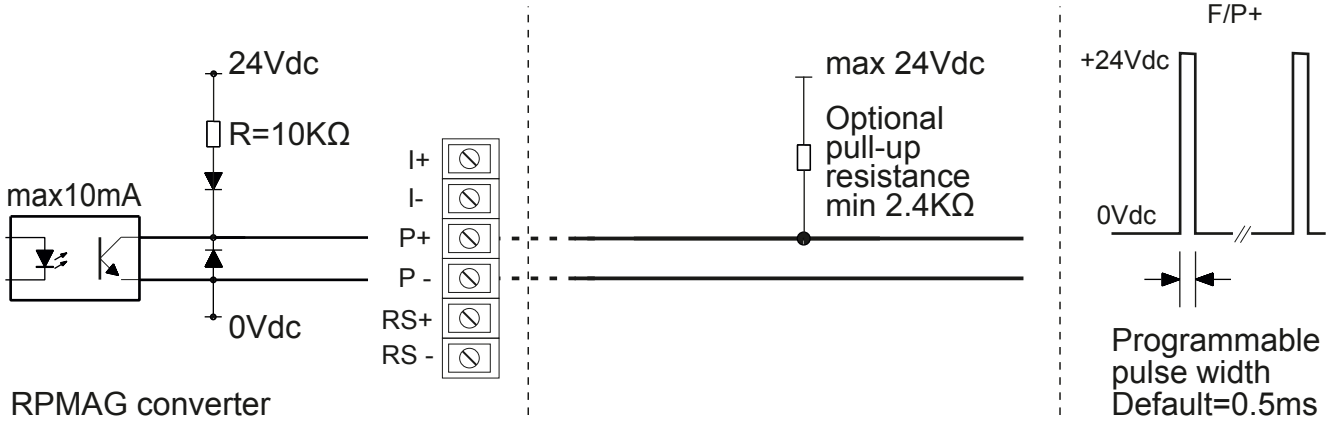

8.4.3 Galvanically isolated digital output (opt.)

Galvanically isolated digital output, is totally floating (potential free).
To us it a properly sized pull-up resistor must be connected to ensure the minimum current required by the acquisition system connected (see drawing below); example: if the acquisition system requires a min. current of 10mA, a 2,4Kohm pull-up resistor must be connected (according to the calculation R = V/I = 24V/10mA = 2,4Kohm) between an external power supply of 24Vdc and the acquisition system input terminal

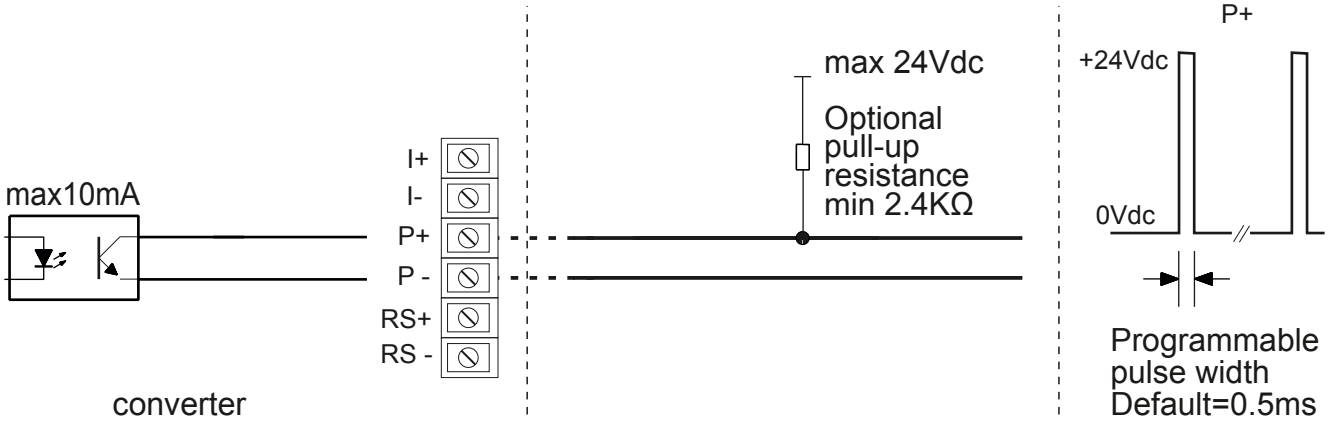

8.4.4 Alarm output

Follow the below steps to connect the signal cable to the transmitter:
1) Insert the signal cable through cable gland.
2) Connect two wires to **D01**, for the #1 alarm threshold, and **D02** terminals for #2 alarm threshold.

The below drawing shows the connection diagram between the RPMAG flowmeter and the 199-B2X multifunction counter unit.

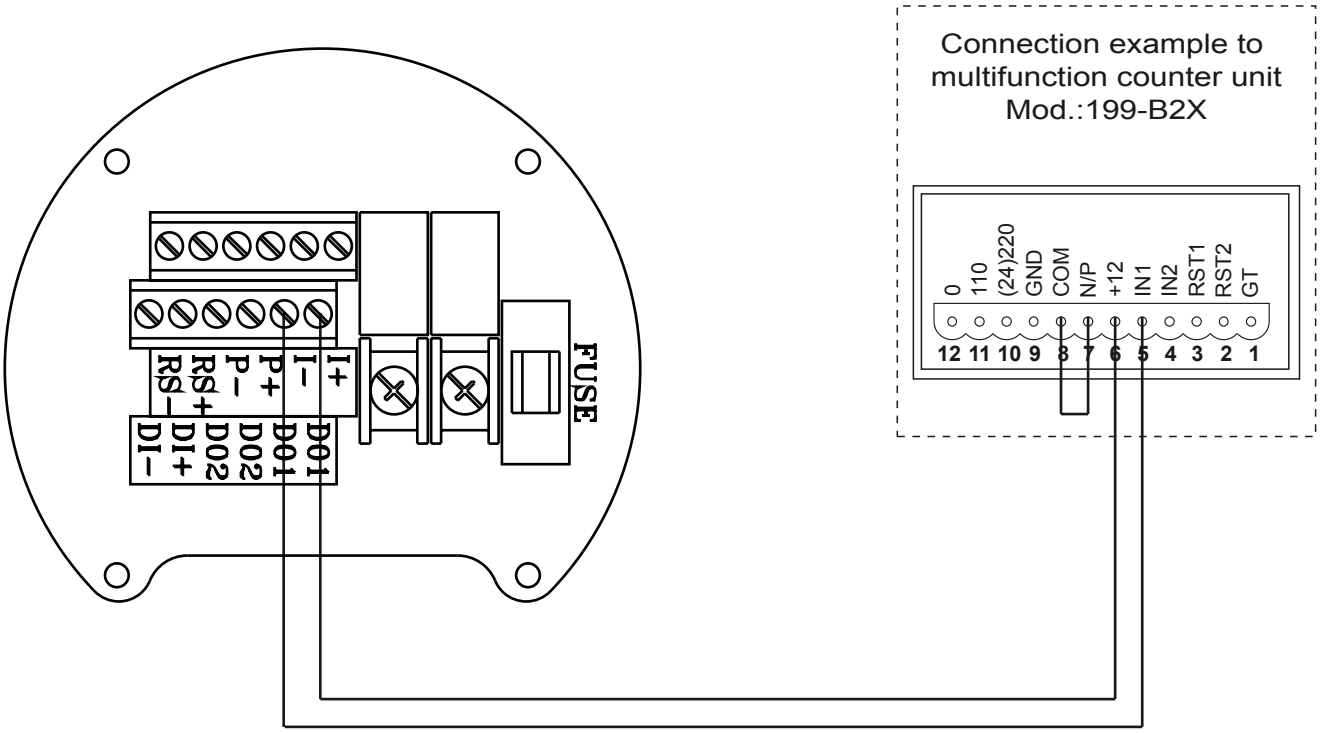

8.4.5 RS485 serial output

Communicate via MODBUS is possible in models with RS485 serial port.
Connect the serial cable to **RS+** and **RS-** terminals

The below drawing shows connection example diagram between RPMAG flowmeter and a PC.

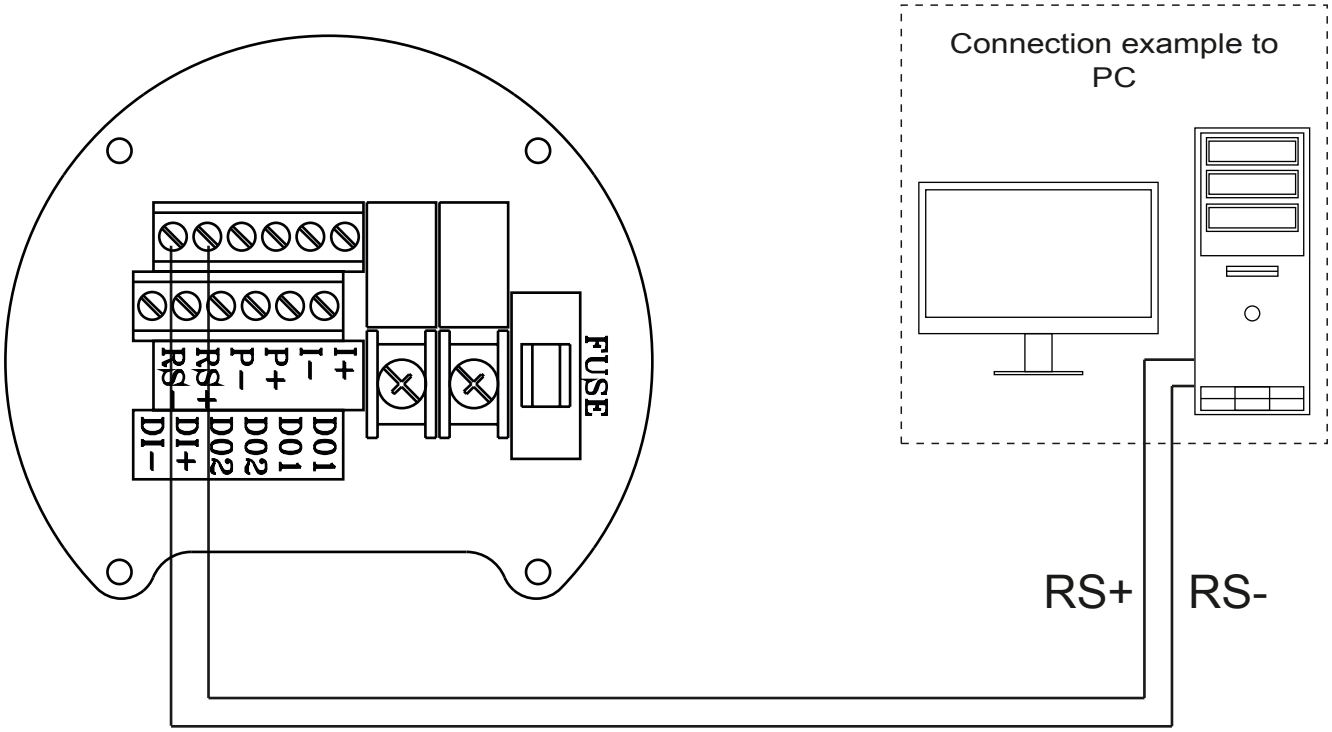

8.5 REMOTE VERSION

During the remote version installation comply with the following information to ensure correct measurements:

1) The cables must be laid in an armored conduit or fixed along their path to avoid errors in measurement, especially with low conductivity fluids

2) The cables should be away from electrical machinery and switching devices such as contactors or solenoid valves.

3) The cables must not be in conduit with power cables or cables for the switching devices control

4) When necessary, ensure the equipotential between sensor and transmitter.

5) The maximum cable length is a fluid conductivity function. Refer to paragraph 6.5.2.

Connect the sensor to the converter according to the below diagram.

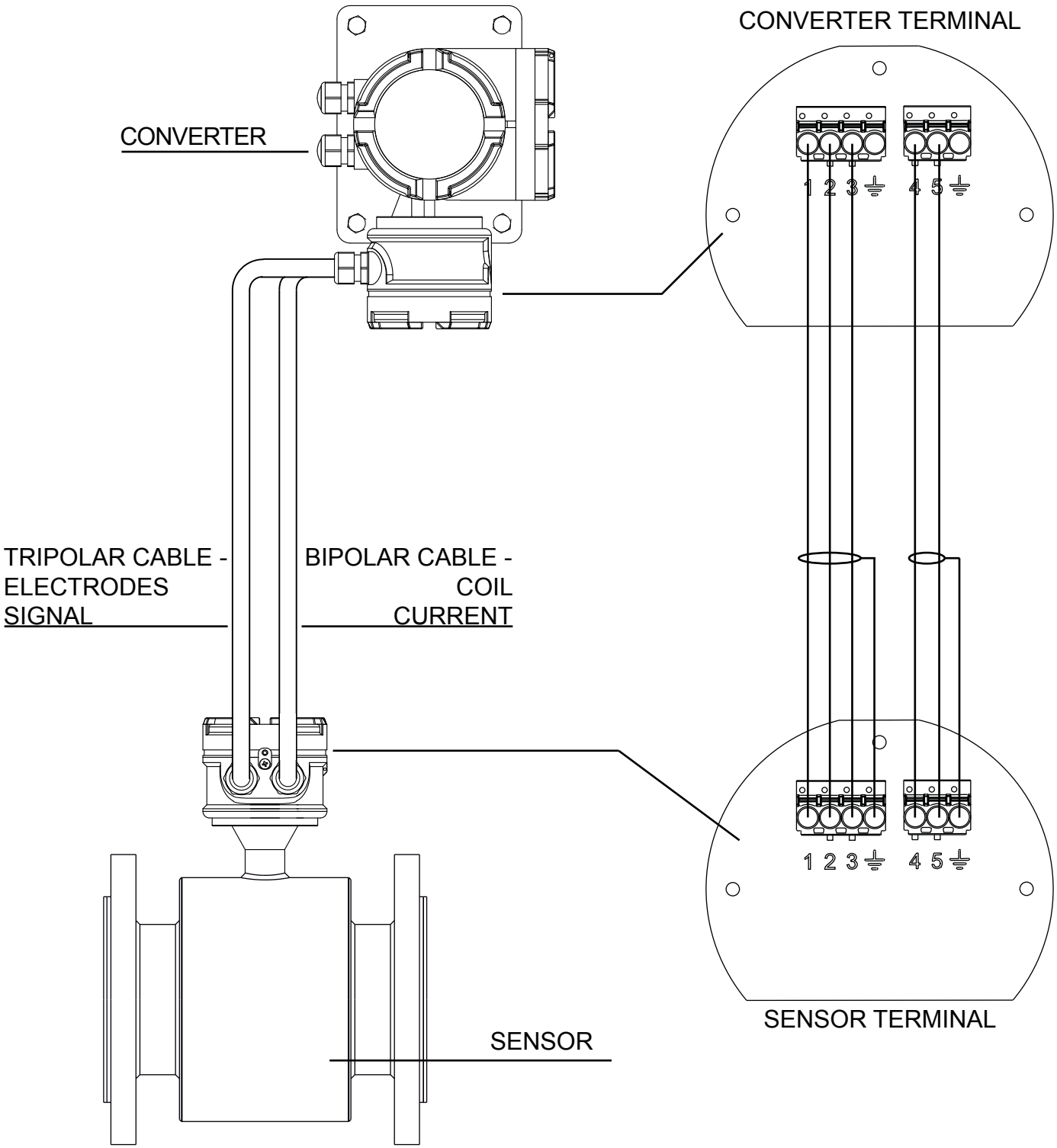

8.5.1 Remote version wiring

Cable	Wire		Function	Terminal position
	Num.	Color		
Bipolar	4	black	coil	4
	5	brown	coil	5
	braid		shield	⏚
Tripolar	1	white	electrode 1	1
	2	yell./green	common GND	2
	3	brown	electrode 2	3
	braid		shield	⏚

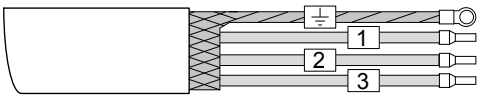

SHIELDED TRIPOLAR CABLE

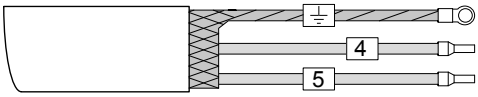

SHIELDED BIPOLAR CABLE

8.5.2 Connecting cables length

Maximum length of the connecting cables between the sensor and the convertor is determined by the fluid conductivity value.
In the graph below the gray highlighted area indicates the allowed cable length in relation to the fluid conductivity value. With an 150 microS fluid conductivity, for example, the connection cables will have a maximum length of 150 meters.

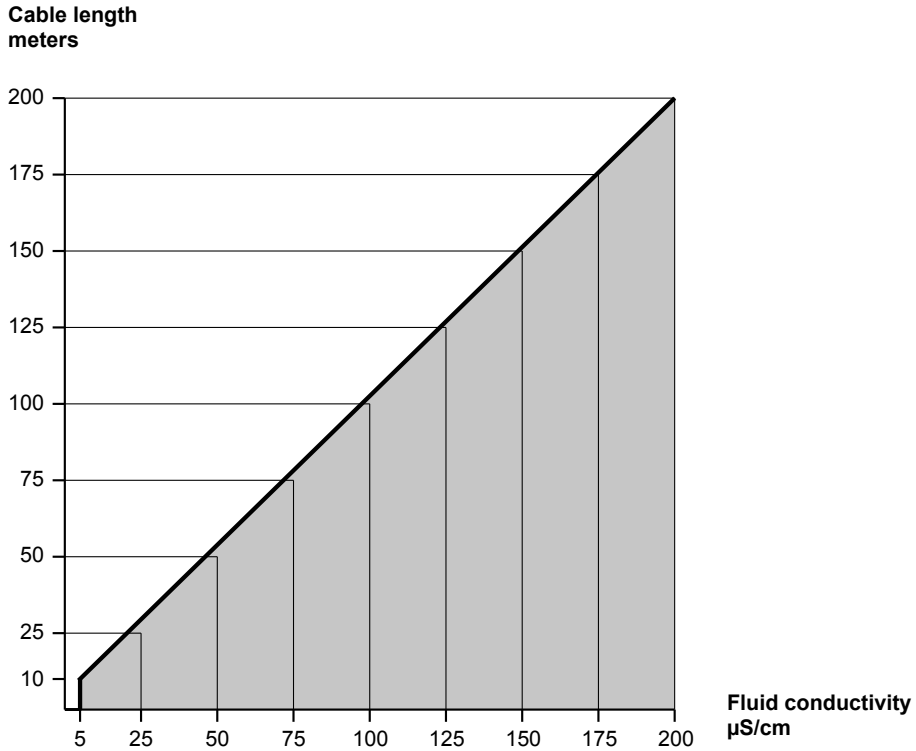

8.5.3 Connectiong cables

8.5.3.1 - Coil cable technical specification

Shielded bipolar cable FR20H2R 2x1.5 section	
Conductors	Tinned copper stranded wire, class 5
Insulations	PVC R2 Ø 2,8mm ± 0,1
Conductors Colors	Black - Brown
Cable stranding	Concentric with polyester tape
Shielding	Tinned copper braid
Sheath	PVC RZ resistant to hydrocarbons; Ø 8,2mm ± 0,30; RAL5015 blue color
Marking	SGM-LEKTRA RODANO MILANO ITALY - 525B005A
Operating temperature	-25÷+70°C (fixed installation)
Test voltage	3KV V.c.a.
Working voltage	450/750V
Conductors electrical resistance	CEI 20-29
Reference Standards	CEI 20-22 II-IEC 332.3A-ROHS 2011/65/UE(ROHS 2)

8.5.3.2 - Electrodes signal cable technical specification

Shielded tripolar cable FR20H2R 3x1.5 section	
Conductors	Tinned copper stranded wire, class 5
Insulations	PVC R2 Ø 2,8mm ± 0,1
Conductors Colors	White - Brown - Yellow/Green
Cable stranding	Concentric with polyester tape
Shielding	Tinned copper braid
Sheath	PVC RZ resistant to hydrocarbons; Ø 8,2mm ± 0,30; RAL5015 blue color
Marking	SGM-LEKTRA RODANO MILANO ITALY - 525B005A
Operating temperature	-25÷+70°C (fixed installation)
Test voltage	3KV V.c.a.
Working voltage	450/750V
Conductors electrical resistance	CEI 20-29
Reference Standards	CEI 20-22 II-IEC 332.3A-ROHS 2011/65/UE(ROHS 2)

9-LOCAL OPERATOR INTERFACE (LOI)

LOI is an operator communications center for the RPmag. Through the LOI, the operator can access any transmitter function for changing configuration parameter settings, checking totalized values, or other functions.

9.1 SAFETY MESSAGES

Instructions and procedures in this section may require special precautions to ensure the safety of the personnel performing the operations. Information that raises potential safety issues is indicated by a warning symbol.
Please refer to the following safety messages before performing an operation preceded by this symbol: ⚠

9.2 WARNINGS

Explosions could result in death or serious injury

- -Verify that the area of installation and operation comply with the characteristics of the measuring tube and the transmitter.
- -Make sure only qualified personnel perform the installation.
- -Do not perform any service other than those contained in this manual unless qualified.

High voltage that may be present on leads could cause electrical shock

- -Avoid contact with leads and terminals.

9.3 LOI FEATURES

LOI option contains a four-line, 16-character liquid crystal display (LCD) that is back-lit and visible from any angle. There are four touch keys on the pad, and a infrared decoder to receive keys that on the remote encoder. Following table lists and details the functions of the LOI keys.

LOI KEY	FUNCTION
⇦	Enter; Moves to the previous display field; Save parameters
⇧	Moves the cursor to the next higher field; Changes user-selected variables in a field to next higher value; Changes parameters on a predefined list; Change display page; Change parameters page when browsing parameters
⇩	Moves the cursor to next lower field; Changes user-selected variables in a field to next lower value; Changes parameters on a predefined list; Change display page; Change parameters page when browsing parameters
⇩	Toggle keypad lock (keep pushed for 3 seconds)
⇨	Enter menu; Moves cursor to next user-selected variable; Changes parameters on a predefined list; Aborts a chosen operation; Aborts browse parameters
⇦ ⇨	Zero Trim (from RUN mode)

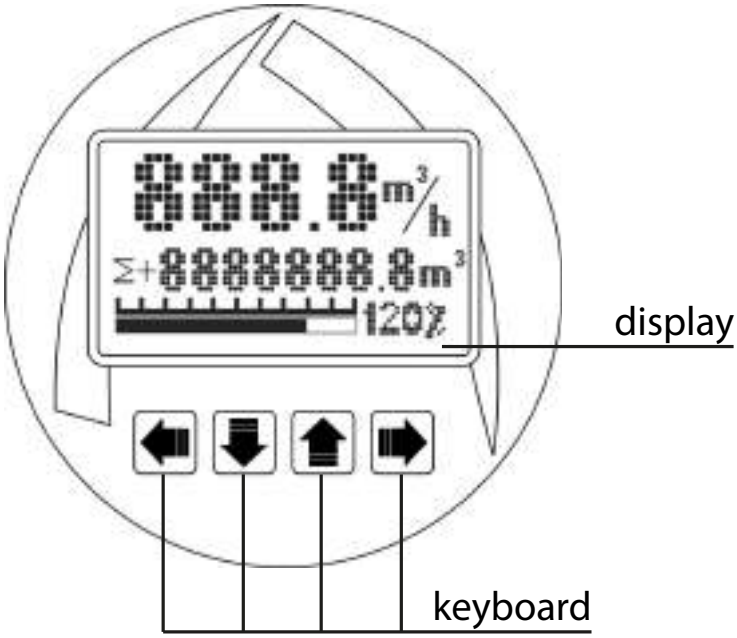

9.4 DISPLAY ROTATION

Each magnetic flowmeter installation is different from application to application; therefore, the display can be rotated to accommodate various setup using the following procedure:

1. ⚠ Disconnect power supply from transmitter·
2. Unscrew the transparent cover.
3. Remove the two screws that secure the “display/electronics” bracket to the container, paying attention to the wiring between the electronics and the terminal.
4. Rotate the display / electronics bracket to set the position (minimum 90° rotation).
5. Tighten the two screws that secure the “display/electronics” bracket to the container.
6. Tighten the transparent cover.

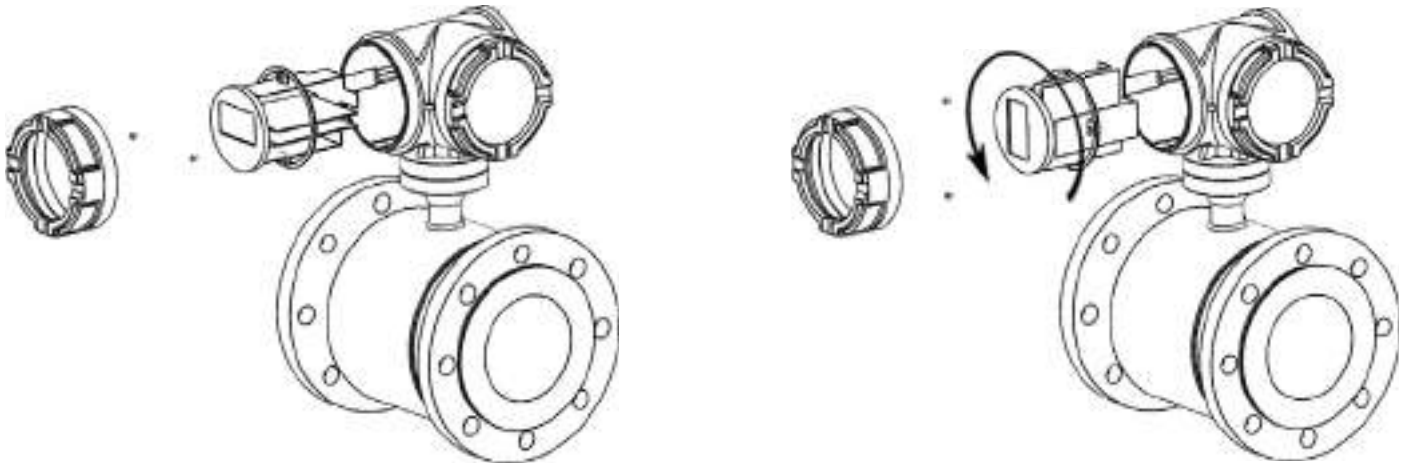

9.5 CONVERTER ROTATION

To a greater functionality and adaptation to the application the entire converter, in addition to the display, can be rotated. Follow the following steps to make the change.

⚠ Disconnect the power supply voltage·

1. Remove the four screws that secure the converter to the sensor pipe.
2. Slightly lift the converter paying attention to the electrical connections between the sensor pipe and the terminal.
3. Turn the converter (minimum 90° rotation) bringing it to the desired position.
4. Fix the converter to the sensor with the 4 fixing screws.

1

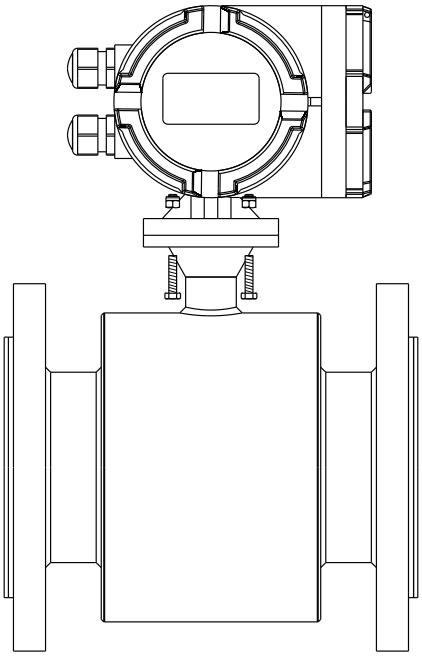

2

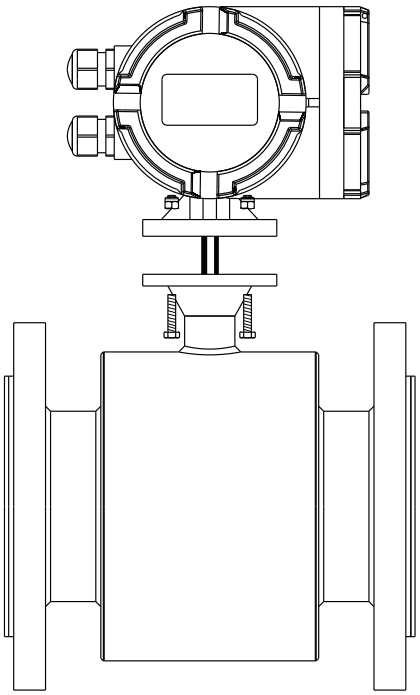

3

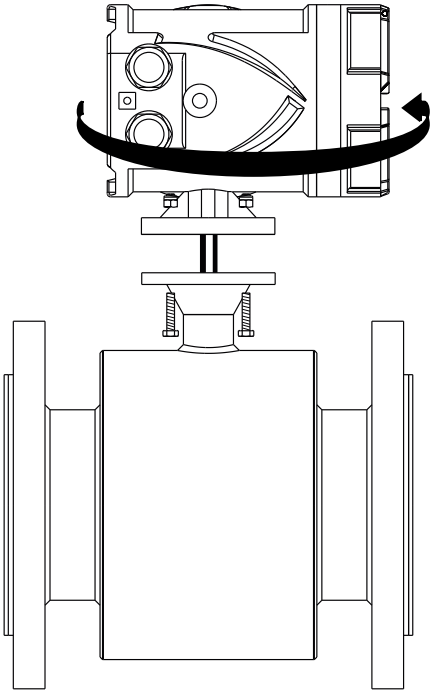

4

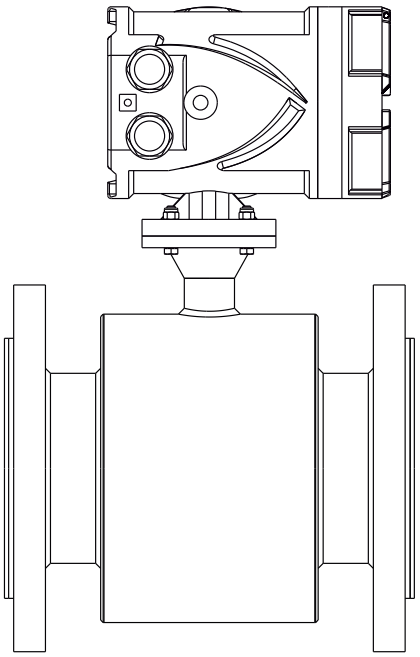

10-PROGRAMMING

10 DATA ENTRY

The LOI keypad has no numerical keys. Enter numerical data using the following procedure:

1. Access the appropriate function.
2. Use to highlight the digit you want to enter or change.
3. Use or to change the highlighted value.
   For numerical data, or toggles through the digits 0÷9,decimal point; For alphabetical data, they toggle through the letters of the alphabet A-Z, digits 0÷9, and the symbols &, +, -, *, /, $, @, %, and the blank space (or are also used to toggle through pre-determined choices that do not require data entry.).
4. Use to highlight and change other digits you want to change.
5. Push to confirm data entry.

10.1 KEYBOARD LOCK

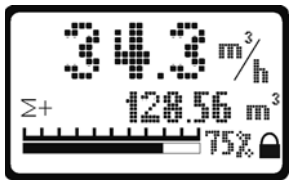

Pushing from RUN mode, for 5 seconds, keyboard will be locked.
Display will show simbol as shown in adjacent picture.
Pushing from RUN mode, for 5 seconds, keyboard will be un-locked.

10.2 LCD CONTRAST

By holding down button ,from RUN mode, you can increase (by pressing the button) or decrease (by pressing) the LCD screen contrast according to your needs.

10.3 DISPLAY PAGE

The RPmag, in RUN mode, has three pages to display data and status, press or to change page.

- **Primary page**

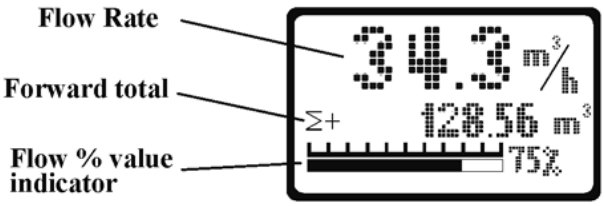

- **Secondary page**

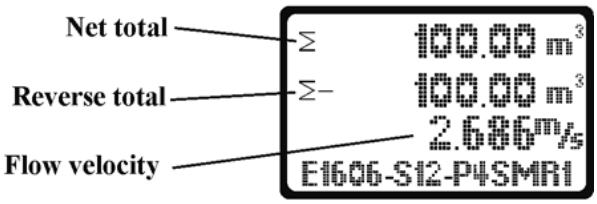

- **Alarm page**

This page will not appear if there is no alarm

10.4 LOI MENU

Push key from run mode: display will show the list of configuration menu as shown here next.

Press or keys to select the desired menu, then press key to access.

Basic
System
Calibration
Test

8.4.1 BASIC

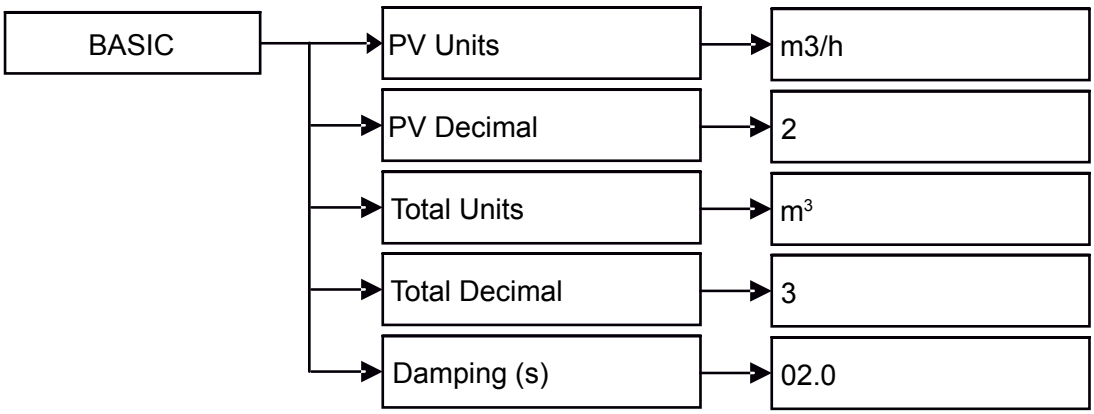

10.4.2 BASIC CONFIGURATION (BASIC)

Press key from run mode: the display will be as shown here next, then press to enter in "Basic" menu

Push or keys to select the desired function and press key to access

Basic
System
Calibration
Test

10.4.2.1 - PV Units

PV Units variable specifies the format in which the flow rate will be displayed.
Default: m3/h.
Range: L/s; m3/s; G/s; L/m; m3/m; G/m; L/h; m3/h; G/h.

PV Units
PV Decimal
Total Units
Total Decimal

Press ,key the display will be as shown here next.

With or select the unit.

PV Units
m3/h
m3/h

Push to confirm, the display will be as shown here next.

Press key to exit and confirm the selection; press key to exit and delete the selection

PV Units
m3/h
←-ENT ESC-→
m3/h

10.4.2.2 - PV Decimal

PV Decimal specifies how many decimals are displayed after the decimal point.
Default: 2
Range: 1÷3

PV Units
PV Decimal
Total Units
Total Decimal

Press key: the display will be as shown here next.

With or select the decimal number places to display

PV Decimal
3
3

Press to confirm, the display will be as shown here next.

Press the key to exit and confirm the selection; press the key to exit and delete the selection..

PV Decimal
3
←-ENT ESC-→
3

10.4.2.3 - Total Units

Total Units specifies the counter display unit
Default: m3
Range: L, Litri; m3, Metri cubi; G, galloni

PV Units
PV Decimal
Total Units
Total Decimal

Press the key: the display will be as shown here next.
With or select the counter display unit

Total Units
m³
m³

Press to confirm, the display will be as shown here next.
press the key to exit and confirm the selection; press the key to exit and delete the selection.

Total Units
m³
←-ENT ESC-→
m³

10.4.2.4 - Total Decimal

Total Decimal specifies how many decimals are displayed after decimal point.
Default: 3
Range: 1÷3

PV Units
PV Decimal
Total Units
Total Decimal

Press the key: the display will be as shown here next.
With or select the decimal number places to display.

Total Decimal
3
3

Press to confirm, the display will be as shown here next.
Press the key to exit and confirm the selection; press the key to exit and delete the selection.

Total Decimal
3
←-ENT ESC-→
3

10.4.2.5 - Damping (s)

Damping(S) sets the delay time in seconds for changes in reading. It ‘used to mitigate the fluctuations in flow measurement..
Default: 2; Range: 0.1÷99.9

PV Decimal
Total Units
Total Decimal
Damping (s)

Press the key the display will be as shown here next.
With or change the digit, with moves the cursor.

Damping (s)
02.0
Max: 99.9
Min: 0.1
02.0

Press to confirm, the display will be as shown here next.
Press the key to exit and confirm the selection; press the key to exit and delete the selection.

Damping (s)
2
←-ENT ESC-→
3

10.4.3 SYSTEM SETUP

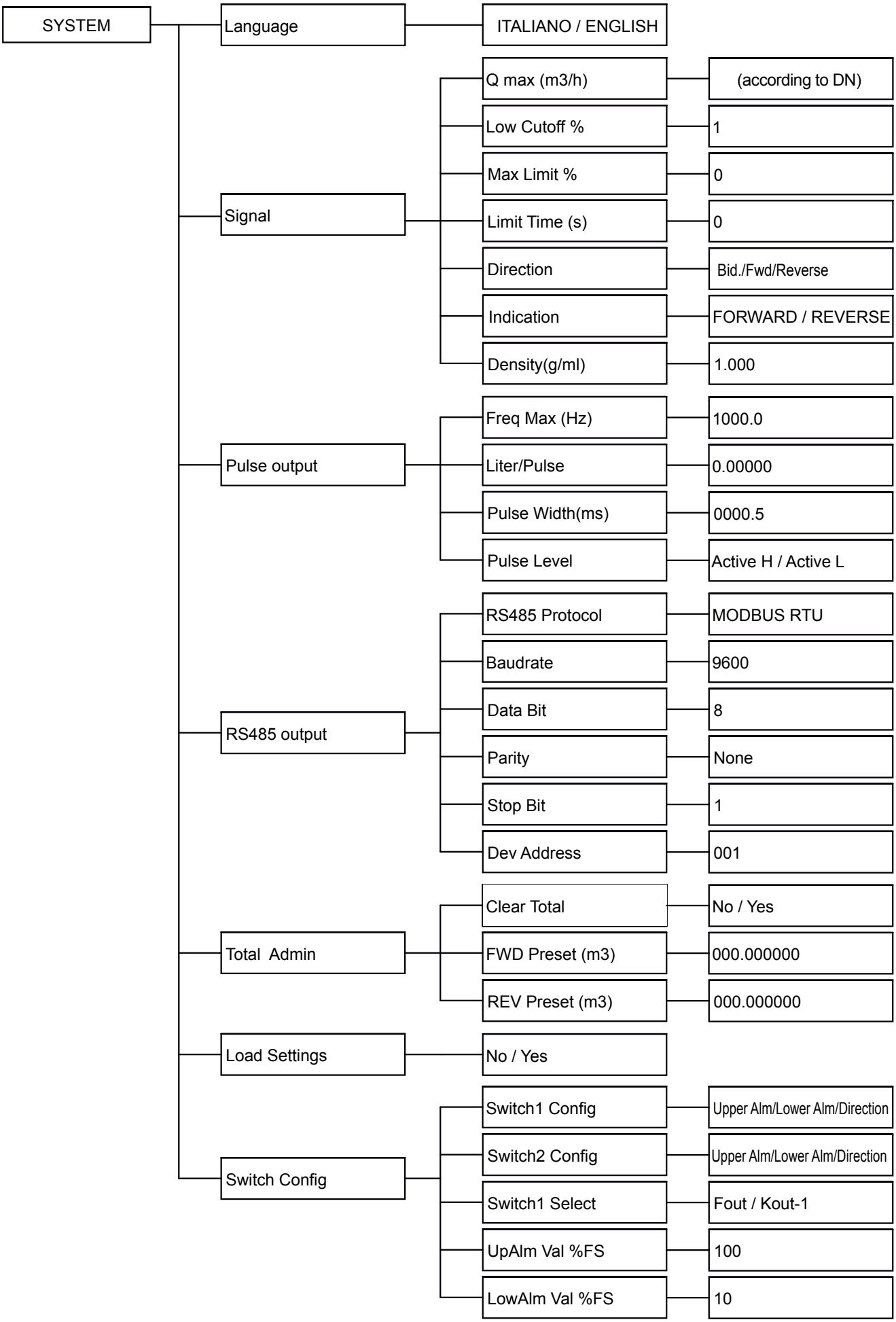

10.4.4 SYSTEM CONFIGURATION (SYSTEM)

Basic
System
Calibration
Test

Press the key from run mode, then press the key to select “System” and press the button to enter. Press the or keys to select the desired function and press the key to access

To access the menu “System” may need to enter the correct password.
The default password: 0200
After entering, you can change the password
Note: If forget password can not access the menu.

10.4.4.1 - Language

Allows menu language selection.
Default: ENGLISH; Range: ITALIANO - ENGLISH

Language
Signal
Pulse Output
RS485 Output

Press key: the display will be as shown here next.
With or select the parameter setting.

Language
ITALIANO

Press to confirm, the display will be as shown here next.
Press the key to exit and confirm the selection; press the key to exit and delete the selection.

Language
-ENT ESC-
ENGLISH

10.4.4.2 - Signal

Press key to enter the submenu “Signal”

Language
Signal
Pulse Output
RS485 Output

10.4.4.2.1 - Qmax (m3/h)

Set the flow measurement 100%. This value adjusts the analog output end scale (20mA) and the frequency output end scale.
The range is related to the sensor DN

Qmax (m3/h)
Low Cutoff %
Max limit %
Limit Time (s)

Press key: the display will be as shown here next.
With or change the digit, with moves the cursor.

Qmax (m3/h)
100mm 282.74340
Max: 424.11500
Min: 5.654867
282.74340

Press to confirm, the display will be as shown here next.
Press key to exit and confirm the selection; press key to exit and delete the selection.

Qmax (m3/h)
125mm 282.743
-ENT ESC-
182.743

10.4.4.2.2 - LowCutoff %

Low Cutoff specifies the Qmax% value below which the instantaneous flow measurement reading (direct or reverse) and the outputs are forced to zero.
Default: 1.0 Range: 0.0÷9.9

```
  Qmax (m3/h)
  Low Cutoff %
  Max limit %
  Limit Time (s)
```

Press key: the display will be as shown here next.
With or change the digit, with moves the cursor.

```
Low Cutoff %
                1.0
Max:   9 . 9
Min:   0 . 0
                2.0
```

Press to confirm, the display will be as shown here next.
Press the key to exit and confirm the selection; press the key to exit and delete the selection.

```
Low Cutoff %
                1.0
←-ENT   ESC-→
                2.0
```

10.4.4.2.3 - Max Limit %

When the measure variation is lower than Max Limit%, or higher but with a lower time period than that set in Limit Time (s), the measure is not detected. When the measure variation is higher than Max Limit% and with a higher time period than that set in Limit Time (s), the measure is detected.
Default: 0.0; Range: 0.0÷9.9

```
  Qmax (m3/h)
  Low Cutoff %
  Max limit %
  Limit Time (s)
```

Press key: the display will be as shown here next.
With or change the digit, with moves the cursor.

```
Max limit %
                1.0
Max:   9 . 9
Min:   0 . 0
                2.0
```

Press to confirm, the display will be as shown here next.
Press key to exit and confirm the selection; press the key to exit and delete the selection.

```
Max limit %
                1.0
←-ENT   ESC-→
                2.0
```

10.4.4.2.4 - Limit Time (s)

Sets the time limit used by the function Max Limit%.
Default: 00.0
Range: 00.0÷99.9

```
  Qmax (m3/h)
  Low Cutoff %
  Max limit %
  Limit Time (s)
```

Press the key: the display will be as shown here next.
With or change the digit, with moves the cursor.

```
Limit Time (s)
                00.0
Max:   99 . 9
Min:    0 . 0
                02.0
```

Press to confirm, the display will be as shown here next.
Press the key to exit and confirm the selection; press the key to exit and delete the selection.

```
Limit Time (s)
                00.0
←-ENT   ESC-→
                02.0
```

10.4.4.2.5 - Direction

This parameter enables the flow direction measurement
Default: Bid (bidirectional)
Range: Fwd (forward); Rev (reverse); Bid. (bidirectional)

Low Cutoff %
Max limit %
Limit Time (s)
Direction

Press the key: the display will be as shown here next.
With or select the parameter setting.

Direction
Bid
Fwd

Press to confirm, the display will be as shown here next.
Press the key to exit and confirm the selection; press the key to exit andvdelete the selection.

Direction
Bid
-ENT ESC-
Fwd

10.4.4.2.6 - Indication

Set what is the positive flow direction compared to the arrow on the sensor.
Default: Fwd (forward)
Range: Fwd (forward); Rev (reverse)

Max limit %
Limit Time (s)
Direction
Indication

Press the key: the display will be as shown here next.
With or select the parameter setting.

Indication
FORWARD
REVERSE

Press to confirm, the display will be as shown here next.
Press the key to exit and confirm the selection; press the key to exit and delete the selection.

Indication
FORWARD
-ENT ESC-
REVERSE

10.4.4.2.7 - Density(g/ml)

Sets the fluid specific weight to convert the measured volume value by weight.
Default: 1;
Range: 0.100÷9.999

Limit Time (s)
Direction
Indication
Density (g/ml)

Press the key: the display will be as shown here next.
With or change the digit, with moves the cursor.

Density (g/ml)
1.000
Max: 9.999
Min: 0.100
1.000

Press to confirm, the display will be as shown here next.
Press the key to exit and confirm the selection; press the key to exit and delete the selection.

Density (g/ml)
1.000
-ENT ESC-
1.000

10.4.4.3 - Pulse Output

Press the key to enter the sub menu “Pulse Output”.

```
  Language
  Signal
  Pulse Output
  RS485 Output
```

10.4.4.3.1 - Freq Max (Hz)

Sets the maximum frequency in relation to Qmax. The digital output is active as a frequency output only when the parameter “Liter / Pulse” is set to 0.0.
Default: 1000.0; Range: 100.0÷5000.0

```
  Freq Max (Hz)
  Liter / pulse
  Pulsewidth (ms)
  Pulse Level
```

Press the key: the display will be as shown here next.
With or change the digit, with moves the cursor.

```
Freq Max (Hz)
                1000.0
Max:    5000.0
Min:     100.0
                1000.0
```

Press to confirm, the display will be as shown here next.
Press the key to exit and confirm the selection; press the key to exit and delete the selection.

```
Freq Max (Hz)
                1000.0
←-ENT   ESC-→
                1000.0
```

10.4.4.3.2 - Liter/Pulse

Set the volume per pulse. When this parameter is set to 0.0, the digital output is active as a frequency output (see “Freq Max (Hz)”).
Default: 0.0; Range: 0.0055÷max. according to the DN

```
  Freq Max (Hz)
  Liter / pulse
  Pulsewidth (ms)
  Pulse Level
```

Press the key: the display will be as shown here next.
With or change the digit, with moves the cursor.

```
Liter / pulse
                0.000000
Max:    ----------------
Min:    0.01570
                1.000000
```

Press to confirm, the display will be as shown here next.
Press the key to exit and confirm the selection; press the key to exit and delete the selection.

```
Liter / pulse
                0.000000
←-ENT   ESC-→
                1.000000
```

10.4.4.3.3 - Pulsewidth (ms)

Sets the pulse width in ms.
Default: 000.5;
Range: 0000.0÷1000.0

```
  Freq Max (Hz)
  Liter / pulse
  PulseWidth (ms)
  Pulse Level
```

Press the key: the display will be as shown here next.
With or change the digit, with moves the cursor.

WARNING - The “Pulsewidth (ms)” parameter must be set to 0.0 when the digital output is used as a frequency output

```
PulseWidth (ms)
                000.5
Max:    500.0
Min:      0.0
                001.0
```

Press to confirm, the display will be as shown here next.
Press the key to exit and confirm the selection; press the key to exit and delete the selection.

```
PulseWidth (ms)
                000.5
←-ENT   ESC-→
                001.0
```

10.4.4.3.4 - Pulse Level

Sets the pulse output energy level. When set LOW the pulse count is low, when set HIGH, the pulse count is high.
Default: Active H (HIGH); Range: Active L (LOW) ÷ Active H (HIGH)

```
Freq Max (Hz)
Liter / pulse
PulseWidth (ms)
Pulse Level
```

Press the key: the display will be as shown here next.
With or select the parameter setting.

```
Pulse Level
            Active L

            Active H
```

Press to confirm, the display will be as shown here next.
Press the key to exit and confirm the selection; press the key to exit and delete the selection.

```
Pulse Level
            Active L
←-ENT  ESC-→
            Active H
```

10.4.4.4 - RS485 Output

Press key to enter the sub menu "RS485 Output" .

```
Language
Signal          →
Pulse Output    →
RS485 Output    →
```

10.4.4.4.1 - RS Protocol

Sets the RS485 output communication protocol.
Default: MOD-BUS RTU
Range: MOD-BUS RTU ÷ MOD-BUS ASC

```
RS Protocol
Baud Rate
Data Bit
Parity
```

Press the key: the display will be as shown here next.
With or select the parameter setting.

```
RS485 Protocol.
      MODBUS-RTU

      MODBUS-ASC
```

Press to confirm, the display will be as shown here next.
Press the key to exit and confirm the selection; press the key to exit and delete the selection.

```
RS485 Protocol.
      MODBUS-RTU
←-ENT  ESC-→
      MODBUS-ASC
```

10.4.4.4.2 - Baudrate

Sets the RS485 output Baud Rate.
Default: 9600
Range: 1200 - 2400 - 4800 - 9600

```
RS Protocol
Baud Rate
Data Bit
Parity
```

Press the key: the display will be as shown here next.
With or select the parameter setting.

```
Baud Rate
            9600

            9600
```

Press to confirm, the display will be as shown here next.
Press key to exit and confirm the selection; press the key to exit and delete the selection.

```
Baud Rate
            9600
←-ENT  ESC-→
            9600
```

10.4.4.4.3 - Data Bit

Sets the RS485 output Data Bit.
Default 8
Range: 8 - 7

```
  RS Protocol
  Baud Rate
  Data Bit
  Parity
```

Press key: the display will be as shown here next.
With or select the parameter setting.

```
Data Bit
                8

                7
```

Press to confirm, the display will be as shown here next.
Press key to exit and confirm the selection; press the key to exit and delete the selection.

```
Data Bit
                8
←-ENT   ESC-→
                7
```

10.4.4.4.4 - Parity

Sets the RS485 output Parity.
Default: NONE
Range: EVEN; ODD; NONE

```
  RS Protocol
  Baud Rate
  Data Bit
  Parity
```

Press the key: the display will be as shown here next.
With or select the parameter setting.

```
Parity
              EVEN

              NONE
```

Press to confirm, the display will be as shown here next.
Press key to exit and confirm the selection; press the key to exit and delete the selection.

```
Parity
              EVEN
←-ENT   ESC-→
              NONE
```

10.4.4.4.5 - Stop Bit

Sets the RS485 output Stop Bit.
Default: 1
Range: 1 - 2

```
  Baud Rate
  Data Bit
  Parity
  Stop Bit
```

Press the key: the display will be as shown here next.
With or select the parameter setting.

```
Stop Bit
                1

                2
```

Press to confirm, the display will be as shown here next.
Press key to exit and confirm the selection; press the key to exit and delete the selection.

```
Stop Bit
                1
←-ENT   ESC-→
                2
```

10.4.4.4.6 - Dev Address

Set the unity UID in RS485 network
Default: 001
Range: 001÷999

Press the key: the display will be as shown here next.
With or change the digit, with moves the cursor.

Press to confirm, the display will be as shown here next.
Press key to exit and confirm the selection; press the key to exit and delete the selection.

```
Data Bit
Parity
Stop Bit
Dev Address
```

```
Dev Address
                001

                002
```

```
Dev Address
                001
←-ENT   ESC-→
                002
```

10.4.4.5 - Total Admin

Press the key to enter the sub menu "Total Admin".

To access the menu "Total Set" may need to enter the correct password.

The default password: 0020
Note: After entering, you can change the password. If forget password can not access the menu

```
Signal          →
Pulse Output    →
RS485 Output    →
Total Admin     →
```

10.4.4.5.1 - Clear Total

Reset totalizer
Default: NO
Range: NO - YES

Press key: the display will be as shown here next.
With or select the parameter setting.

Press to confirm, the display will be as shown here next.
Press key to exit and confirm the selection; press the key to exit and delete the selection.

```
Clear Total
FWD Preset (m3)
REV Preset (m3)
```

```
Clear Total
                No

                Yes
```

```
Clear Total
                No
←-ENT   ESC-→
                Yes
```

10.4.4.5.2 - FWD Preset (m3)

Predetermines the positive totalizer value
Default: 0000000000
Range: 1÷9999999999

Press the key: the display will be as shown here next.
With or change the digit, with moves the cursor.
Press to confirm, then press key to exit and confirm the selection

```
Clear Total
FWD Preset (m3)
REV Preset (m3)
```

```
FWD Preset (m3)
                000.000000
Max: ----------------------------
Min: ----------------------------
                123.000000
```

10.4.4.5.3 - REV Preset (m3)

Predetermines the negative totalizer value
Default: 0000000000
Range: 1÷9999999999

Clear Total
FWD Preset (m3)
REV Preset (m3)

Press the key: the display will be as shown here next.

With or change the digit, with moves the cursor.

Press to confirm, then press key to exit and confirm the selection

REV Preset (m3)
000.000000
Max: ----------
Min: ----------
123.000000

10.4.4.6 - Load Setting

Load factory settings.
Default: NO Range: YES - NO

Pulse Output
RS485 Output
Total Admin
Load Settings

Press key: the display will be as shown here next.

With or select the parameter setting.

Load Settings
No
No

Press to confirm, the display will be as shown here next.

Press the key to exit and confirm the selection; press the key to exit and delete the selection.

Load Settings
No
←-ENT ESC-→
Yes

10.4.4.7 - Switch Config

Press to enter the “Switch Config” sub menu

RS485 Output
Total Admin
Load Settings
Switch Config

10.4.4.7.1 - Switch1 Config

Sets the function assigned to the D01 relay. The available functions are:

- **Direction**; the negative instantaneous flow measuring signaling is enabled.
When the instantaneous flow value is negative (ex. -12.34m3/h), the relay is energized and the contact to the D01 terminal is closed

- **Upper Alm**; the high flow rate alarm signaling is enabled;
When the instantaneous flow rate value is higher than the threshold value, set the parameter “UpAlm Val %FS” (see par. 10.4.4.7.4), the relay is energized and the contact to the D01 terminal is closed

- **Lower Alm**; the low flow rate alarm signaling is enabled;
When the instantaneous flow rate value is lower than the threshold value, set the parameter “LowAlm Val %FS” (see par. 10.4.4.7.5), the relay is energized and the contact to the D01 terminal is closed

Switch1 Config
Switch2 Config
Switch1 Select
UpAlm Val%

Default: Direction Range: Direction; Upper Alm; Lower Alm

Press key: the display will be as shown here next.

With or select the parameter setting.

Switch1 Config
Upper Alm
Lower Alm

Press to confirm, the display will be as shown here next.

Press the key to exit and confirm the selection; press the key to exit and delete the selection.

Switch1 Config
Upper Alm
←-ENT ESC-→
Lower Alm

10.4.4.7.2 - Switch2 Config

Switch1 Config
Switch2 Config
Switch1 Select
UpAlm Val%

Sets the function assigned to the D02 relay. The available functions are:

- **Direction**; the negative instantaneous flow measuring signaling is enabled.
When the instantaneous flow value is negative (ex. -12.34m3/h), the relay is energized and the contact to the D02 terminal is closed

- **Upper Alm**; the high flow rate alarm signaling is enabled;
When the instantaneous flow rate value is higher than the threshold value, set the parameter “UpAlm Val %FS” (see par. 10.4.4.7.4), the relay is energized and the contact to the D02 terminal is closed

- **Lower Alm**; the low flow rate alarm signaling is enabled;
When the instantaneous flow rate value is lower than the threshold value, set the parameter “LowAlm Val %FS” (see par. 10.4.4.7.5), the relay is energized and the contact to the D02 terminal is closed

Default: Direction Range: Direction; Upper Alm; Lower Alm

Press key: the display will be as shown here next.
With or select the parameter setting.

Switch2 Config
Upper Alm
Lower Alm

Press to confirm, the display will be as shown here next.
Press the key to exit and confirm the selection; press the key to exit and delete the selection.

Switch2 Config
Upper Alm
-ENT ESC-
Lower Alm

10.4.4.7.3 - Switch1 Select

Switch1 Config
Switch2 Config
Switch1 Select
UpAlm Val%

Associated to the D01 exit (default), or to the P +/- open collector output, the function set to the Switch1 Config parameter (see connections to pag.22).
The available functions are:

- **Kout-1**; the D01 output is associated with the function set to the parameter “ Switch1 Config” (default setting)

- **Fout**; the P+/- open collector output is associated with the function set to the parameter “ Switch1 Config”; eg. with “ Switch1 Config “ set to “Upper Alm”, the P +/- output state is low (0Vdc) during the non-alarm condition, and is high (24Vdc) during the alarm condition.

N.B. - Selecting the “ Fout “ function, the D01 relay is disabled and the P +/- output can not be used as an pulse counter or frequency output.

Default: Kout-1 Range: Kout-1; Fout

Press key: the display will be as shown here next.
With or select the parameter setting.

Switch 1 Select
Kout-1
Kout-1

Press to confirm, the display will be as shown here next.
Press the key to exit and confirm the selection; press the key to exit and delete the selection.

Switch 1 Select
Kout-1
-ENT ESC-
Fout

10.4.4.7.4 - UpAlm Val %FS

Set the high flow rate alarm threshold; the value is expressed in% of Qmax.
Ex .: with Qmax (see par. 10.4.4.2.1) to 250m3/h, and with the threshold set at 70%, the alarm is activated when the measured flow rate is greater than 175m3/h (250*70% = 175

Default: 100.0 Range: 0.0÷130.0

Switch1 Config
Switch2 Config
Switch1 Select
UpAlm Val%

Press key: the display will be as shown here next.

With or select the parameter setting.

UpAlm Val%
100.0
Max: 130.0
Min: 0.0
100.0

Press to confirm, the display will be as shown here next.

Press the key to exit and confirm the selection; press the key to exit and delete the selection.

UpAlm Val%
100.0
←-ENT ESC-→
200.0

10.4.4.7.5 - LowAlm Val %FS

Set the low flow rate alarm threshold; the value is expressed in% of Qmax.
Ex .: with Qmax (see par. 8.4.4.2.1) to 250m3/h, and with the threshold set at 20%, the alarm is activated when the measured flow rate is lower than 50m3/h (250*20% = 50)

Default: 010.0 Range: 0.0 ÷ 130.0

Switch2 Config
Switch 1 Select
UpAlm Val %FS
LowAlm Val %FS

Press key: the display will be as shown here next.

With or select the parameter setting.

LowAlm Val %FS
010.0
Max: 130.0
Min: 0.0
010.0

Press to confirm, the display will be as shown here next.

Press the key to exit and confirm the selection; press the key to exit and delete the selection.

LowAlm Val %FS
010.0
←-ENT ESC-→
005.0

10.4.5 CALIBRATION

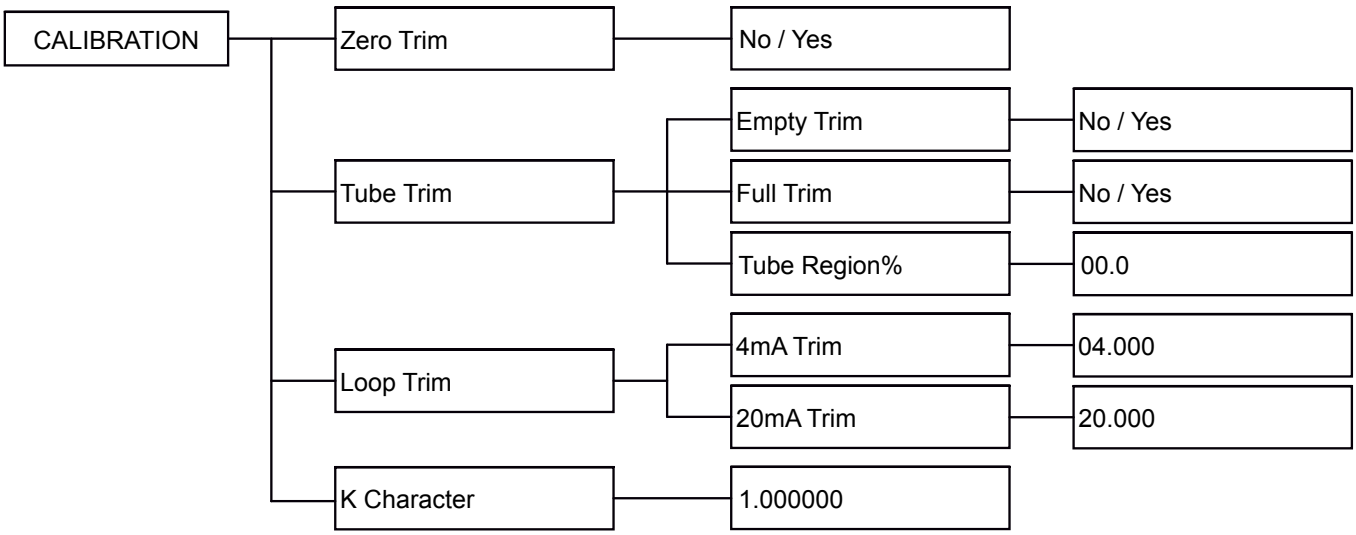

10.4.6 SYSTEM CALIBRATION (CALIBRATION)

Press from run mode, then press to select “Calibration” and press button to enter. Press or to select the desired function and press key to access

```
  Basic
  System
  Calibration
  Test
```

10.4.6.1 - Zero Trim

Zero flow measurement calibrate. The sensor must be full and the flow stopped.
Default: NO Range: YES - NO

```
  Zero Trim
  Tube Trim
  Loop Trim
  K Character
```

Press key: the display will be as shown here next.
With or select the parameter setting.

```
Zero Trim
                No

                Yes
```

Press to confirm, the display will be as shown here next.
Press the key to exit and confirm the selection; press the key to exit and delete the selection.

```
Zero Trim
                No
←-ENT   ESC-→
                Yes
```

10.4.6.2 - Tube Trim

Push to enter in “Tube Trim” .

```
  Zero Trim
  Tube Trim
  Loop Trim
  K Character
```

10.4.6.2.1 - Empty Trim

ATTENTION: pipe must be empty before continue.
Performs a empty pipe recognition self calibration.
Default: NO

Range: NO - YES

```
  Empty Trim
  Full Trim
  Tube Region %
```

Press key: the display will be as shown here next.
With or select the parameter setting.

```
Empty Trim
                No

                No
```

Press to confirm, the display will be as shown here next.
Press the key to exit and confirm the selection; press the key to exit and delete the selection.

```
Empty Trim
                No
←-ENT   ESC-→
                Yes
```

10.4.6.2.2 - Full Trim

ATTENTION: pipe must be full before continue
Performs a full pipe recognition self calibration.
Default: NO Range: NO - YES

```
 Empty Trim
⇨Full Trim
 Tube Region %
```

Press ➡ key: the display will be as shown here next.
With ⬆ or ⬇ select the parameter setting.

```
Full Trim
                No

                No
```

Press ⬅ to confirm, the display will be as shown here next.
Press the ⬅ key to exit and confirm the selection; press the ➡ key to exit and delete the selection.

```
Full Trim
                No
←-ENT   ESC-→
               Yes
```

10.4.6.2.3 - Tube Region %

Sets the system sensitivity level to recognize the air presence in the sensor: higher the value, greater the sensitivity.
Default: 40.0; Range: 0.0÷97.9

```
 Empty Trim
 Full Trim
⇨Tube Region %
```

Press ➡ key: the display will be as shown here next.
With ⬆ or ⬇ select the parameter setting.

```
Tube Region %
               40.0
Max:     99.9
Min:      0.0
               40.0
```

Press ⬅ to confirm, the display will be as shown here next.
Press the ⬅ key to exit and confirm the selection; press the ➡ key to exit and delete the selection.

```
Tube Region %
               40.0
←-ENT   ESC-→
               80.0
```

10.4.6.3 - Loop Trim

Press ➡ to enter the submenu “Loop Trim” .

```
 Zero Trim
 Tube Trim
⇨Loop Trim
 K Character
```

10.4.6.3.1 - 4mATrim

Performs calibration of 4mA. Procedure: connect to analog output terminals a milli-ammeter; insert the detected current measurement; the system will perform an auto calibration function.
Deafult: 4.000. Range: 3.000÷5.000

```
⇨4mA Trim
 20mA Trim
```

Press ➡ key: the display will be as shown here next.
With ⬆ or ⬇ select the parameter setting.

```
4mA Trim
               00.000
Max:     5.000
Min:     3.000
               04.000
```

Press ⬅ to confirm, the display will be as shown here next.
Press the ⬅ key to exit and confirm the selection; press the ➡ key to exit and delete the selection.

```
4mA Trim
               00.000
←-ENT   ESC-→
               04.000
```

10.4.6.3.2 - 20mA Trim

Performs calibration of 20mA. Procedure: connect to analog output terminals a milli-ammeter; insert the detected current measurement; the system will perform an auto calibration function.
Default: 20.000. Range: 19.000÷21.000

```
 4mA Trim
➔20mA Trim
```

Press ➡ key: the display will be as shown here next.
With ⬆ or ⬇ select the parameter setting.

```
20mA Trim
                 00.000
Max:     21.000
Min:     19.000
                 20.000
```

Press ⬅ to confirm, the display will be as shown here next.
Press the ⬅ key to exit and confirm the selection; press the ➡ key to exit and delete the selection.

```
20mA Trim
                 00.000
←-ENT   ESC-→
                 20.000
```

10.4.6.4 - K Character

Press ➡ to enter the function. “K Character “is the measure correction coefficient.
Default: 1. Range: 0.97÷1.03

```
 Zero Trim
 Tube Trim
 Loop Trim
➔K Character
```

To access the menu “Total Set” may need to enter the correct password.
The default password: 0003
After entering, you can change the password
Note: If forget password can not access the menu.

Press ➡ key: the display will be as shown here next.
With ⬆ or ⬇ select the parameter setting.

```
K Character
                 1.000000
Max:     1.0300000
Min:     0.9700000
000              1.000000
```

Press ⬅ to confirm, the display will be as shown here next.
Press the ⬅ key to exit and confirm the selection; press the ➡ key to exit and delete the selection.

```
K Character
                 1.000000
←-ENT   ESC-→
000              1.025000
```

10.4.7 TEST

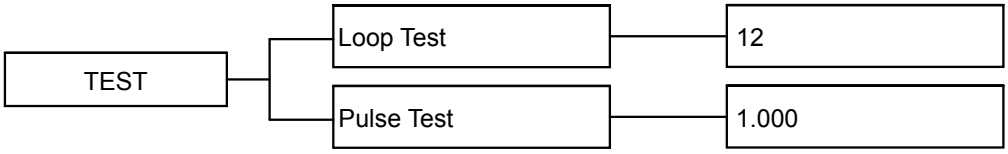

10.4.8 OUTPUT SIGNAL TEST (TEST)

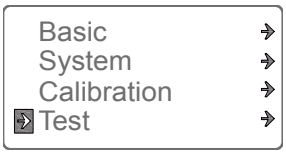

Premere il tasto dalla modalità run, poi premere il tasto per selezionare "Test", quindi premere il tasto per accedervi.

10.4.8.1 - Loop Test

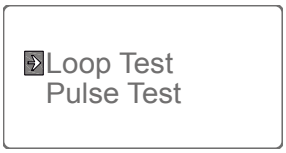

"Loop Test" force the 4÷20mA signal output to the value set for the test.
Example: Setting the testing value at 16.2 mA, the actual output signal value is forced to 16.2mA. When exiting the TEST function, the 4-20mA output signal returns to be a Qmax set function
Default: 012 Range: 4.0÷20.0

Press key: the display will be as shown here next.
With or select the parameter setting. Press to exit.

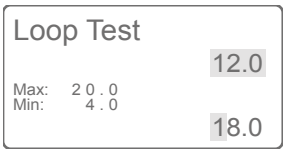

10.4.8.2 - Pulse Test

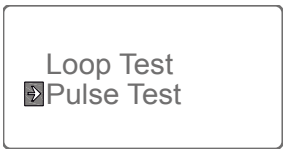

"Pulse Test" force the frequency signal output to the value set for the test.
Example: Setting the testing value at 2000Hz, the actual output signal value is forced to 2000Hz. When exiting the TEST function, the frequency output signal returns to be a Qmax set function
Default: 1000 Range: 1.0÷5000.0

Press key: the display will be as shown here next.
With or select the parameter setting. Press to exit.

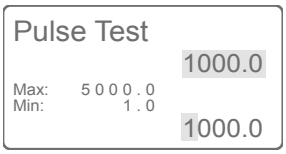

11-TROUBLESHOOTING

Problems in the magnetic flowmeter system are usually indicated by incorrect output readings from the system, error messages, or failed tests. Consider all sources when identifying a problem in your system..

Symptom	Potential Cause	Corrective Action
Output at 0 mA.	No power to transmitter.	Check power source and connections to the transmitter.
	Analog o utput improperly configured.	Check the connections
	Electronics failure.	Check the connections
Output at 4 mA	Transmitter in multidrop mode	Configure Poll Address to 0 to take transmitter out of multidrop mode
	Low Flow Cutoff set too high	Configure Low Flow Cutoff to a lower setting or increase flow to a value above the low flow cutoff
	Flow is i n reverse direction	Enable Reverse Flow function
	Shorted coil	Check coil
	Empty pipe	Fill pipe
	Electron ics failure	Replace the electronics boards
Pulse output at zero, regardless of flow	No power to transmitter	Check power source and connection to the transmitter
	Wrong wiring	Check pulse output wiring at digital output terminals. Refer to wiring diagram for pulse output
	Reverse flow	Enable Reverse Flow function
	Electronics failure	Replace the electronics boards
Reading doesn't appear to be within rated accuracy	Transmitter, control system, or other receiving device not configured properly	Check all configuration variables for the transmitter,flowtube, communicator, and/or control system.,Perform a loop test to check the integrity of the circuit
	Electrode Coating	Use replaceable electrodes Downsize flowtube to increase flowrate above 3 ft/s. Periodically clean flowtube
	Air in line	Move the flowtube to another location in the process line to ensure that it is full under all conditions
	Flow rate is below 1 ft/s (specification issue)	See accuracy specification for specific transmitter and flowtube
	Auto zero was not performed when the flowtube is full,or flowrate is zero	Perform the auto zero function
	Sensor pipe failure	Perform Sensor pipe tests electrode
	Sensor pipe failure–Shorted or open coil	Perform Sensor pipe tests coil
	Transmitter failure	Replace the electronics boards

In some circumstances, process conditions themselves can cause the meter output to be unstable. The basic procedure for addressing a noisy process situation is outlined below. Complete them in order. When the output attains the desired stability, no further steps are required:

1. Change coil drive to 33 Hz.
2. Increase the damping.

If the basic steps for troubleshooting are not sufficient contact our technical support.

Symptom	Potential Cause	Corrective Action
Noisy Process	Chemical additives upstream of magnetic flowmeter	Move injection point downstream of magnetic flowmeter, or move magnetic flowmeter
	Sludge flows–Mining/Coal/Sand/ Slurries (other slurries with hard particles)	Decrease flow rate below 10 ft/s
	Styrofoam or other insulating particles in process	Consult factory
	Electrode coating	Use replaceable electrodes Downsize flowtube to increase flow rate above 3 ft/s. Periodically clean Sensor pipe
	Air in line	Move the Sensor pipe to another location in the process line to ensure that it is full under all conditions
Meter output is unstable	Electrode incompatibility	Check Magnetic Flowmeter Material Selection Guide for chemical compatibility with electrode material
	Improper grounding	Check ground wiring. See wiring and grounding procedures
	High local magnetic or electric fields	Move magnetic flowmeter (20–25 ft. away is usually acceptable)
	Control loop improperly tuned	Check control loop tuning
	Sticky valve (look for periodic oscillation of meter output)	Correct valve sticking
	Sensor pipe failure	Perform Sensor pipe Tests
	Analog output loop problem	Check that the 4–20 mA loop matches the digital value. Perform loop test

12-FACTORY TEST AND QUALITY CERTIFICATE

In conformity to the company and check procedures I certify that the equipment:

RPMAG ..... serial n°: .....

is conform to the technical requirements on Technical Data and it is made in conformity to the procedure

Quality Control Manager: ..... Production and check date: .....

LTH Electronics Ltd, Chaul End Lane, Luton, Bedfordshire. LU4 8EZ England
Telephone: +44 (0)1582 593693 Fax: +44 (0)1582 598036
email: sales@lth.co.uk web: www.lth.co.uk